BIOLOGICAL NUTRIENT REMOVAL STUDY
CLEARFIELD WASTEWATER TREATMENT FACILITY

FOR

CLEARFIELD MUNICIPAL AUTHORITY

APRIL 2008

Transmittal Letter
Executive Summary

Section 1: Introduction to Facility Plan and NRT Program

1.1 Nutrient Reduction Goals 1-1
1.2 Clearfield Wastewater Treatment Plant 1-1
1.3 Purpose and Scope of the Study 1-3

Section 2: Summary of Existing Facilities and Conditions 2-1

2.1 Introduction 2-1
2.2 History, Location and Capacity 2-1
2.2.1 Historical 2-1
2.2.2 Location 2-1
2.2.3 Capacity 2-1
2.2.4 Influent Characteristics 2-3
2.2.5 Sanitary Sewer System and Combined Sewer Overflows 2-3
2.3 Process Flow Description 2-7
2.3.1 Raw Wastewater Flow Pattern 2-7
2.3.2 Sludge Handling 2-7
2.4 Assessment of Existing Facilities and Equipment 2-8
2.4.1 Preliminary Treatment 2-8
2.4.1.1 Influent Hydraulics 2-8
2.4.1.2 Grit Chamber 2-8
2.4.1.3 Bar Screens 2-9
2.4.2 Main Pumping Station 2-10
2.4.3 Primary Influent Distribution Structure 2-12
2.4.4 Primary Sedimentation Tanks (PSTs) 2-12
2.4.5 Activated Sludge Aeration Tanks 2-14
2.4.6 Secondary Sedimentation Tanks 2-17
2.4.7 Chlorine Disinfection 2-18
2.4.8 Solids Handling System 2-19

Section 3: Evaluation of NRT Process Options 3-1

3.1 Introduction 3-1
3.2 Preliminary NRT Evaluation 3-1
3.3 NRT Modeling Evaluation 3-2
3.4 Process Alternatives 3-2
3.4.1 Introduction 3-2
3.4.2 Step-Feed 3-5
3.4.3 Modified Ludzack-Ettinger (MLE) Process 3-5
3.4.4 Virginia Initiative Plant (VIP) Process 3-6
3.4.5 NRT Process Upgrade with Denitrification Sand Filters 3-7

3.5 CMA WWTF NRT Upgrade Options 3-8
3.6 Option 1: New Treatment Plant 3-8
3.7 Option 2: New Reactor Tanks with Existing Plant Upgrade 3-14
3.8 Option 3: Upgrade Existing Plant/Process 3-19
3.9 Option 4: Buy Nutrient Credits Only 3-23
3.10 Conclusions 3-23

Section 4: Cost Analysis 4-1

4.1 Cost-Effectiveness Evaluation 4-1
4.2 Project Financing 4-3
4.3 Operating Costs 4-4
4.4 Existing Debt Service Costs 4-5
4.5 Projected Operating Costs and Debt Service 4-5
4.6 Sewer Rate Analysis 4-6

Section 5: Project Schedule 5-1

Section 6: Operational Considerations 6-1

Section 7: Recommendations 7-1

List of Tables

Table 1-1 Nutrient Loading Summary 1-2
Table 1-2 Nutrient Concentration Summary 1-2
Table 1-3 Clearfield WWTF NPDES Effluent Limits 1-2
Table 2-1 Hydraulic/Organic Loading (1998-2007) 2-3
Table 2-2 Sewer System Tabulation and Infiltration Potential (By System Owner) 2-4
Table 2-3 Long-Term Combined Sewer Overflow (CSO) Control Plan Implementation Schedule 2-5
Table 2-4 Primary Settling Tank Characteristics 2-12
Table 2-5 Aeration Tank Characteristics 2-15
Table 2-6 Secondary Settling Tanks Characteristics 2-17
Table 2-7 Trace Elements Concentration in Biosolids Generated 2-23
Table 2-8 Fecal Coliform Survey Results 2-23
Table 3-1 Preliminary NRT Process Evaluation Results 3-2
Table 3-2 Summary of Projected Effluent N and P Achieved by Option 1 3-9
Table 3-3 Summary of Projected Effluent N and P Achieved by Option 2 3-14
Table 3-4 Summary of Projected Effluent N and P Achieved by Option 3 3-22
Table 3-5 Nutrient Credit Analysis 3-23
Table 4-1 Project Cost Estimate for Option 1: New Treatment Plant 4-1

List of Tables (Continued…)

Table 4-2	Project Cost Estimate for Option 2: New Reactor Tanks with Existing Plant Upgrade	4-2
Table 4-3	Project Cost Estimate for Option 3: Upgrade Existing Plant/Process	4-2
Table 4-4	Project Cost Estimate for Option 4: Buy Nutrient Credits Only	4-3
Table 4-5	Tributary Municipalities BNR Costs	4-3
Table 4-6	Tabulation of Power BNR Consumption (Options 1 and 2)	4-4
Table 4-7	Current Indebtedness (As of January 1, 2007)	4-5
Table 4-8	Projected Operating Costs and Debt Service	4-5
Table 4-9	Sewer Rate Schedule - Meter Rates (Effective February 1, 2004)	4-6
Table 4-10	Sewer Rate Analysis - Proposed Option 1 Project (Per Quarter)	4-6
Table 4-11	Sewer Rate Analysis - Proposed Option 2 Project (Per Quarter)	4-6
Table 4-12	Sewer Rate Analysis - Proposed Option 3 Project (Per Quarter)	4-7
Table 4-13	Comparison of Regional Sewer Rates	4-7

List of Figures

Figure 2-1	Location Map	2-2
Figure 2-2	Interceptor Sewer System	after pg. 2-4
Figure 2-3	Existing Site Plan	after pg. 2-7
Figure 2-4	Existing Process Schematic	after pg. 2-7
Figure 2-5	Grit Chamber	2-9
Figure 2-6	Bar Screen	2-10
Figure 2-7	Influent Pump	2-11
Figure 2-8	Grit Pump	2-11
Figure 2-9	Primary Settling Tank	2-14
Figure 2-10	Aeration Tank, Circumference Around a Clarifier	2-16
Figure 2-11	Secondary Setting Tank	2-18
Figure 2-12	Chlorine Contact Chamber	2-19
Figure 2-13	RAS and WAS Pumps	2-20
Figure 2-14	Sludge Thickener	2-21
Figure 2-15	Anaerobic Sludge Digester Floating Cover	2-22
Figure 3-1	MLE Process Flow Schematic with Step Feed Option	3-5
Figure 3-2	VIP Process Flow Schematic with Step Feed Option	3-6
Figure 3-3	Biowin Schematic Model of Option 1 and of Option 2	3-9
Figure 3-4	Proposed Site Plan Layout "A" for Option 1	after pg. 3-9
Figure 3-5	Proposed Site Plan Layout "B" for Option 2	after pg. 3-9
Figure 3-6	Proposed Site Plan Layout for Option 2	after pg. 3-14
Figure 3-7	Biowin Schematic Model of Option 3	3-22
Figure 3-8	Proposed Schematic of Option 3	after pg. 3-22
Figure 3-9	Proposed Site Plan Layout for Option 3	after pg. 3-22

Appendix

Appendix A Biowin Data for Option 1 and Option 2
Appendix B Biowin Data for Option 3
Appendix C NPDES Permit
Appendix D Summary of Plant Characteristics
Appendix E Intensive Sampling Results
Appendix F Detailed Cost Estimates

Abbreviations

ADF	Average Design Flow
BNR	Biological Nutrient Removal
BOD	Biochemical Oxygen Demand
CMA	Clearfield Municipal Authority
CMAS	Complete Mixed Activated Sludge
CSO	Combined Sewer Overflow
DEP	Department of Environmental Protection
GPD	Gallons per Day
MGD	Million Gallons per Day
MLE	Modified-Ludzack Ettinger
NPDES	National Pollution Discharge Elimination System
NRT	Nutrient Reduction Technology
PADEP	Pennsylvania Department of Environmental Protection
PFR	Plug Flow Reactor
PST	Primary Settling Tank
RAS	Return Activated Sludge
SCADA	Supervisory Control and Data Acquisition
SOR	Surface Overflow Rate
SST	Secondary Settling Tank
SWD	Side Water Depth
TMDL	Total Maximum Daily Loads
TN	Total Nitrogen
TP	Total Phosphorus
TSS	Total Suspended Solids
UCT	University of Cape Town
VIP	Virginia Initiative Process
WAS	Waste Activated Sludge
WEF	Water Environment Federation
WWTF	Wastewater Treatment Facility

April 15, 2008

Board of Directors
Clearfield Municipal Authority
107 East Market Street
Clearfield, PA 16830

Attn: Jeff Williams, Manager

RE: Wastewater Treatment Facility
Biological Nutrient Removal Study

Dear Board Members:

Please find enclosed our engineering report on Biological Nutrient Removal at the Clearfield Wastewater Treatment Facility.

The study includes an assessment of existing treatment systems for conversion and adaptation to a biological nutrient removal process. We have included results of intensive wastewater sampling and testing along with computer modeling of various BNR treatment alternatives.

In addition, we performed an alternatives evaluation and cost effectiveness analysis of the most compatible BNR systems. A detailed cost estimate and financial analysis was performed for the recommended alternative along with a project implementation schedule.

If you have any questions or require additional information, please contact our office at your convenience.

Sincerely,
GWIN, DOBSON & FOREMAN, INC.

Mark Glenn, P.E.
President

enclosures
90016/NRT Evaluation Report.doc
cc: File

Executive Summary

1. The existing Clearfield Municipal Authority (CMA) wastewater treatment facility (WWTF) is a conventional activated sludge process with a single stage carbon oxidation process for biochemical oxygen demand (BOD_5) and total suspended solids (TSS) removal. The plant, built in 1960 and upgraded in 1975, consistently achieves a high level of organic removal and has consistently met all PADEP effluent discharge limits. However, the facility removes very little ammonia nitrogen and, therefore, does not achieve nitrification.

2. As part of the Chesapeake Bay nutrient reduction strategy, the PADEP has mandated that wastewater treatment plants reduce nitrogen and phosphorus discharges. The WWTF was not designed for biological nutrient removal (BNR). The facility must achieve nitrogen and phosphorus loading limits by September 30, 2011 according to the new NPDES permit.

3. The treatment plant needs to be upgraded since the existing activated sludge process does not achieve complete nitrification, mainly due to lack of sufficient reactor capacity. Due to lack of nitrification, the plant is unable to achieve total nitrogen removal as per the new NPDES permit.

4. This study includes an assessment of existing treatment system for conversion and adaptation to a BNR process. Intensive wastewater sampling and testing, along with computer modeling of various BNR treatment alternatives, was performed. An alternatives evaluation and cost effectiveness analysis was done of the most compatible BNR system for the plant. The results include a cost estimate and financial analysis of the recommended alternative along with a project implementation schedule.

5. The Modified Ludzack-Ettinger (MLE)/Virginia Initiative Process (VIP) (Plug Flow, Single Stage, Activated Sludge) should be implemented as the Nutrient Removal Technology (NRT) at the WWTF. This process offers adaptation to NRT processes such as the A2O, UCT and Johannesburg systems.

6. Computer modeling, capital cost and operational cost analysis, highlighted four major options to achieve TN and TP NPDES limits at the WWTF.

7. Option 1 deals with building a completely new treatment plant adjacent to the existing WWTF. This option utilizes the MLE/VIP process for TN and TP NPDES limits at a cost of $28 million. The peak design flow is 13.5 MGD while the average daily design flow is 4.5 MGD. The final plant capacity will depend on the success of the Borough/Township sewer project to reduce peak system flows and eliminate CSO discharges.

8. Option 2 deals with increasing reactor and clarifier volume by building new reactors and clarifiers at a cost of $21 million. This option also utilizes the MLE/VIP process for TN and TP NPDES limits. This option utilizes the existing sludge handling facility. The peak design flow is 13.5 MGD while the average daily design flow is 4.5 MGD. The final plant capacity will depend on the success of the Borough/Township sewer project to reduce peak system flows and eliminate CSO discharges.

9. Option 3 outlines an interim approach to contain TN and TP discharge near the NPDES limits. This option utilizes MLE process and carbon augmentation (for BOD_5 supplement) to limit TN and TP at a cost of $4.1 million. Option 3 will be assessed after completion of the ongoing Lawrence Township and Clearfield Borough sewer separation project in 2012. Option 3 will continue to rely on upstream CSO's to relieve the plant of peak flow.

10. Option 4 uses the nutrient credit approach to attain the TN and TP NPDES limit. This option uses TN and TP discharge data of the WWTF to predict the cost of buying nutrient credits ranging from $250,000 to $460,000. The option does not include any retrofit/modification of the existing plant.

11. The Modified Ludzack-Ettinger (MLE) Process (Plug Flow, Single Stage, Activated Sludge) should be implemented as the Nutrient Removal Technology at the WWTF. This process offers future adaptation to other NRT processes including the VIP, A2O, UCT and Johannesburg systems.

12. Option 3 (Retrofit Existing Plant/Process) is the most cost effective MLE process option for adaptation to the existing treatment plant. Moreover, this option allows the CMA to comply with the BNR limits until the ongoing sewer separation project is complete. This option may not bring the TN and TP yearly discharge under the NPDES limit, however the yearly nutrient discharge will be in a controlled range and hence will limit excessive spending for nutrient credits.

13. This option includes installing a 320,000 gallon tank (which will be used as the anoxic reactor zone for the MLE process), with submersible mixers. The option will also include retrofitting the existing distribution structure for step-feed purposes, installation of baffle walls in existing aeration tanks, replacing coarse bubble diffusers with fine bubble diffusers, higher pumping and piping capacity and arrangement for chemical feed.

14. Option 3 will include provisions for a step-feed system during peak flow events. No recommendations are made at this time for the sludge digestion, conditioning, thickening, dewatering, storage or disposal system. This system will be integrated entirely into the NRT system.

15. The total project cost of the recommended improvements is $4.1 million. We recommend that the Authority issue Sewer Revenue Bonds, pursue Pennvest financing or local financing through a bank note. Unless the legislature enacts supplemental funding, Pennvest financing may not be considered a viable alternative.

16. Failure of the Clearfield Borough and Lawrence Township sewer replacement projects to eliminate CSO discharges and peak system flow will necessitate a costly treatment compliance project for the Authority. This compliance cost, reflected in Options 1 and 2, will be at least $21 to $28 million, and is entirely dependent on the final peak flow. According to the Consent Order and Agreement and CMA's Long Term Control Plan, the Authority will be forced to implement whatever treatment compliance project is necessary to eliminate all CSO's and treat all flow at the WWTF.

17. No recommendations or costs are offered for improving the upstream conveyance system including pump stations and interceptor sewers. The final peak flow from the Township and Borough collection systems will determine the need, if any, for upgrading these systems.

18. To comply with the NPDES permit deadlines, it is recommended that engineering and design work commence immediately so that the necessary design documents, plans, specifications, contract documents and permit application be submitted for construction to commence around mid-late 2009 and be completed and ready for operation on September 30, 2010.

Section 1: Introduction to Facility Plan and NRT Program

1.1 Nutrient Reduction Goals

On June 8, 2000, the Commonwealth of Pennsylvania entered into an agreement with the Chesapeake Bay Partnership to reduce nutrient and sediments load entering the Bay. Governor Ridge directed the PA department of Environmental Protection (PADEP) to develop strategy for nutrient reductions from agricultural, forestry, urban stormwater and point source discharges (among others, wastewater treatment plants). Excess nutrients, particularly phosphorus and nitrogen, deplete the oxygen in tributary rivers and ultimately in the Bay. Depleted oxygen inhibits the growth of aquatic species.

In December 2004, Governor Rendell presented Chesapeake Bay Strategy developed by PADEP. The plan includes increasing forested buffers and wetlands, control of agricultural and farm runoff, stormwater management, increasing riparian buffers and limiting wastewater and industrial discharges. Although wastewater treatment plant discharge only 10% of the total nutrient loading, they are targeted as "point source" dischargers and are regulated through National Pollution Discharge Elimination System (NPDES) permitted process. The remaining i.e. around 90% of nutrient loading are due to "non-point" discharges such as runoff from agricultural farms, urban areas and forests.

To control wastewater pollution, PADEP has established maximum nutrient loads for total phosphorus (TP) and total nitrogen (TN) for the major state tributaries of the Chesapeake Bay. Treatment plants have to meet annual cap loads (and not instantaneous limits) for the Susquehanna and Potomac River watersheds. Point source cap loads were further allocated for each major wastewater treatment facility in the drainage basin, including the Clearfield Municipal Authority (CMA). The cap load limits were partially based on the design flow capacity of the treatment plant.

1.2 Clearfield Wastewater Treatment Plant

The Clearfield wastewater treatment plant uses a conventional activated sludge (secondary) treatment process for achieving organic and suspended solids removal. The plant has complied with all water quality and effluent parameters specified in the state/federal NPDES discharge permit. However, the aeration tanks at the WWTF have a limited detention time (4.8 hours at the design flow of 4.5 MGD). Owing to this detention time, the plant principally removes biological oxygen demand (BOD_5) from the influent wastewater, but achieves virtually no nitrification. The lack of nitrification is documented by the intensive sampling data performed during November 2007 and monthly discharge monitoring reports. The limitations of the existing process place practical limits on the plant's ability to achieve nutrient reduction.

A summary of the NPDES cap loadings and influent and effluent total nitrogen and phosphorus (from Feb 2007-Jan 2008) is provided in Table 1-1 and Table 1-2. The January 11, 2008 NPDES permit issued by PADEP includes total annual loadings for the CMA WWTF. Please refer to Table 1-3.

Table 1-1: Nutrient Loading Summary

	Influent (lbs/yr)	Effluent (lbs/yr)	NPDES Limit (lbs/yr)	%
TP	19,231	7,336	10,959	-33
TN	186,445	134,244	82,191	+63

Table 1-2: Nutrient Concentration Summary

	Influent (mg/l)	Effluent (mg/l)	NPDES Limit (mg/l)	%
TP	1.40	0.54	0.80	-33
TN	13.61	9.80	6.00	+63

In addition, the permit stipulates compliance with the mass loading limits by September 30, 2011. Please refer to Table 1-3 for the NPDES effluent limits.

Table 1-3: Clearfield WWTF NPDES Effluent Limits

Parameter	Average Monthly (mg/L)	Average Weekly (mg/L)	Instantaneous Maximum (mg/L)
$CBOD_5$	25	40	50
Total Suspended Solids	30	45	60
Total Residual Chlorine	0.5		1.6
pH	From 6.0 to 9.0 inclusive		
Fecal Coliform			
(5-1 to 9-30)	200/100 ml as a Geometric Average		
(10-1 to 4-30)	2,000/100 ml as a Geometric Average		
Chesapeake Bay Requirements			
Parameter	**Concentration (mg/L)**	**Mass (lbs)**	
	Monthly Average	**Monthly**	**Annual**
Ammonia-N	Report	Report	Report
Kjeldahl-N	Report	Report	
Nitrate + Nitrite as N	Report	Report	
Total Nitrogen	Report	Report	Report
Total Phosphorus	Report	Report	Report
Net Total Nitrogen		Report	82,191*
Net Total Phosphorus		Report	10,959*

* The permit contains conditions which authorize the permittee to apply nutrient reduction credits, to meet the Net Total Nitrogen and Net Total Phosphorus effluent limits, under the Department of Environmental Protection's (Department) Trading of Nutrient and Sediment Reduction Credits Policy and Guidelines (392-0900-001, December 30, 2006). The conditions include the requirement to report application of these credits in Supplemental Discharge Monitoring Reports (DRMs) submitted to the Department.

* Net Total Nitrogen and Net Total Phosphorus limits compliance date will begin on October 1, 2010. Since these reporting requirements are annual loads, reporting on compliance with the annual limitations will be required on the Supplemental DMR--Annual Nutrient Summary by November 28, 2011. The facility is required to monitor and report for Net Total Nitrogen and Net Total Phosphorus from the effective date of the permit until October 1, 2010.

1.3 Purpose and Scope of the Study

The Clearfield Municipal Authority informed PADEP of their intention to comply with the new nutrient limits on June 20, 2007. This commitment included the provision for an engineering feasibility study to achieve compliance with the NPDES permit limits. The Authority commissioned Gwin, Dobson & Foreman, Inc., Consulting Engineers, to complete the feasibility study, the results of which are included herein. The report includes the following major components:

a. Characterization of influent and effluent flows, and wastewater constituents for a sufficient period of record.

b. Analyze average daily flows and peak flow events within the context of hydraulic and process capacity of the existing plant.

c. Incorporate previous studies and projects performed at the CMA WWTF including sludge handling process (i.e. anaerobic sludge mixing system; solids dewatering centrifuge), installation of floating roof covers on anaerobic digesters and replacement of primary clarification mechanisms.

d. Determine hydraulic and process capacity of existing plant and function and serviceability of process treatment equipment.

e. Perform computer modeling of existing and proposed processes for various nitrogen/phosphorous removal scenarios and processes using BioWin® modeling software.

f. Determine optimum nitrogen removal technologies (NRT) most compatible with the existing physical plant and system operation.

g. Assess existing treatment processes and mechanical equipment for use in NRT process including necessary retrofitting.

h. Perform an alternatives evaluation of several comparable NRT processes and provide recommended alternatives, including cost effectiveness considerations.

i. Compile cost estimates of capital construction components, related operating costs and associated engineering, legal and administrative costs to implement the project.

j. Review funding options and compute debt service for new construction and include analysis of existing debt.

k. Determine effect on sewer rates and compare with other regional sewer authorities of similar size and NRT requirements.

l. Develop a project implementation schedule including milestones for completion of engineering, design, construction and system start-up and commissioning.

The conclusions and recommendations of this planning report should provide sufficient direction to the Authority for the full implementation of the project within established deadlines and at the most reasonable cost.

Section 2: Summary of Existing Facilities and Conditions

2.1 Introduction

This section assesses the physical and biological treatment processes, along with process treatment and equipment systems for functional adaptation with the new effluent limits. The Clearfield plant continues to meet current effluent limits but will be unable to meet the 2010 NPDES permit limits for total nitrogen.

2.2 History, Location and Capacity

2.2.1 Historical

A primary treatment facility, consisting of two (2) primary settling tanks, anaerobic sludge digesters, vacuum sludge filters and a chlorine contact tank, was built in 1960. The facility provided 30% organic and 50% suspended solids removal. Because of new secondary treatment standards, an activated sludge process (aeration tanks and secondary settling tanks) was added in 1977. The original 1960 plant and 1976 upgrade project were designed by Hill & Hill, Inc., Consulting Engineers, Northeast, PA.

In 1995, a self cleaning bar screen and screenings building were constructed. In 2005, a centrifuge, anaerobic sludge mixing system, floating anaerobic sludge tank covers, sludge heating system and sludge storage building were installed to enhance biosolids handling capability. In addition, the primary clarifier mechanisms were also replaced.

2.2.2 Location

The Clearfield Municipal Authority's Wastewater Treatment Plant is located at the confluence of Clearfield Creek and the West Branch of the Susquehanna River in Lawrence Township. The precise location of the plant is shown on Figure 2-1. The plant discharges treated wastewater into the West Branch of the Susquehanna River. The West Branch is located within the Susquehanna/Chesapeake Basin, State Water Plan 9, Subbasin 8 Upper West Branch Susquehanna River (HUC 02050201), and is classified for trout stocking, water supply, recreation and fish consumption. The nearest downstream public water supply intake is the Shawville Generating Station, located on the West Branch, about 8 miles downstream.

2.2.3 Capacity

The plant has a permitted hydraulic capacity of 4.5 MGD and an organic BOD_5 capacity of 4,253 lbs/day. The organic capacity was derived for a flow of 3.0 MGD and BOD_5 concentration of 170 mg/l. The plant can treat a peak flow of 5.25 MGD. The plant consistently achieves 90-95% removal of BOD_5 and suspended solids under average loading conditions.

Figure 2-1: Location Map (Scale 1" = 2000')

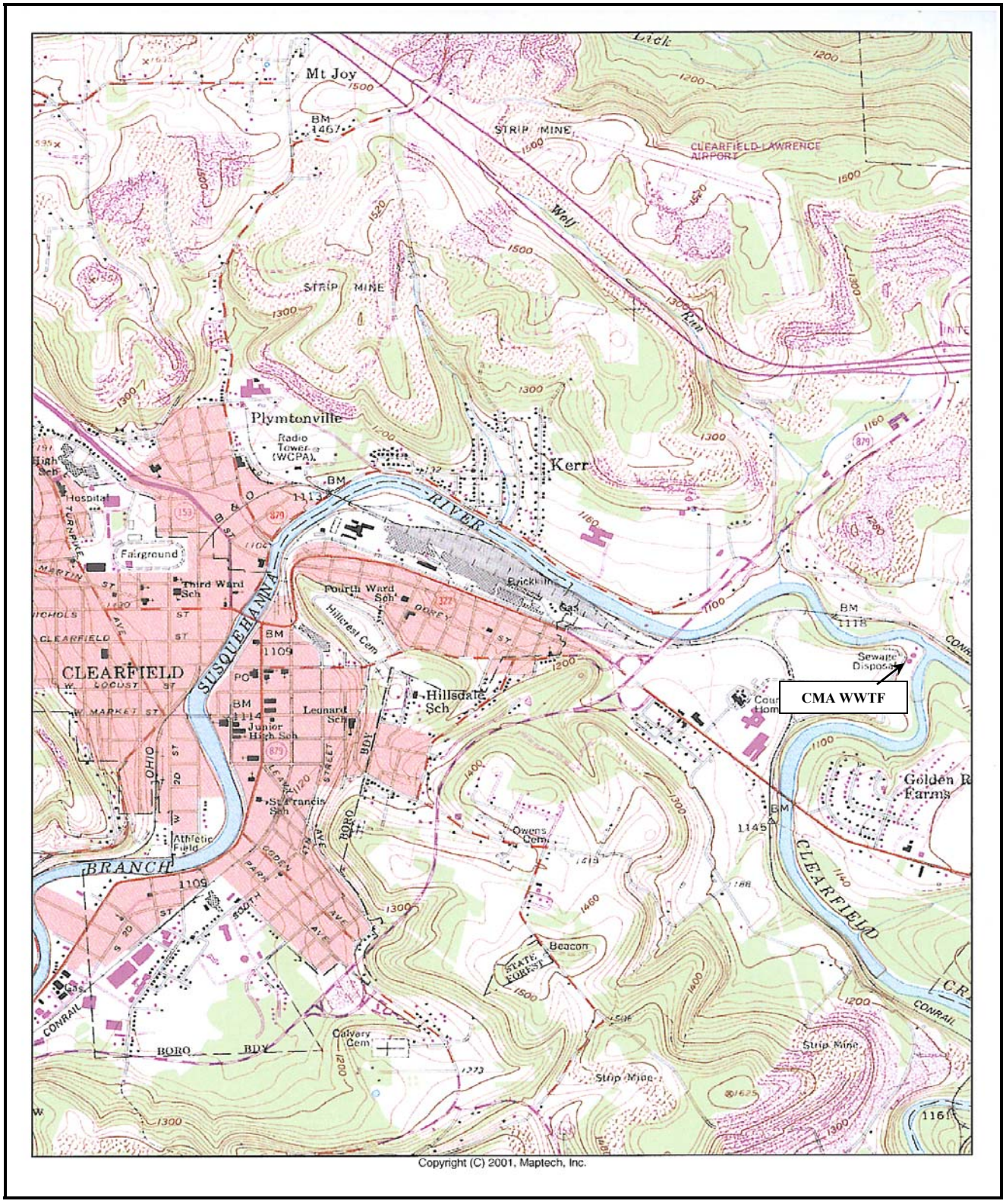

2.2.4 Influent Characteristics

The following tabulation shows the hydraulic and organic loading at the WWTF over the last 10 years.

Table 2-1: Hydraulic/Organic Loading (1998-2007)

Year	Total Precipitation	Annual Average Hydraulic Loading (MGD)	Maximum Monthly Hydraulic Loading (MGD)	Annual Average Organic Loading (lbs/day)	Maximum Monthly Organic Loading (lbs/yr)
2007		2.664	4.158	2,533	2,943
2006	45.68	2.433	3.517	2,328	2,681
2005	39.25	2.480	3.760	2,354	3,157
2004	54.86	3.075	3.900	2,169	2,931
2003	52.23	3.155	3.860	2,483	3,027
2002	41.49	2.724	3.485	2,577	3,240
2001	33.41	2.404	3.304	2,984	3,836
2000	37.45	2.628	3.592	2,668	3,526
1999	36.96	2.631	4.027	2,294	3,337
1998	37.03	2.658	3.634	2,371	3,695
Average	**41.19**	**2.685**	**3.724**	**2,476**	**3,237**

The maximum hydraulic flow is governed by upstream CSO discharges. Generally, flow is consistent with precipitation or lack thereof. Organic loading is generally consistent but can be effected by low-flow deposition of organic matter in large diameter combined sewers. This organic relationship has not been quantified.

Since January 1986, the Authority has accepted brine fluid from natural gas wells within a six county area. This brine fluid is processed through an on-site wastewater pretreatment facility. This process was evaluated by a recent treatability and monitoring study. This study concluded that the treatment facility could process up to 14,000 gpd. The results of a 1996 laboratory analyses indicated that the Clearfield wastewater treatment facility was unaffected by the pretreated brine fluid. During 2007, 10,100 gpd of brine fluid was processed at the treatment facility. The Authority operates the brine pretreatment facility and assesses this cost to a consortium of brine generators.

2.2.5 Sanitary Sewer System and Combined Sewer Overflows

The Authority owns and operates the wastewater treatment facility and interceptor sewer system. The interceptor sewer system consists of 85,300 LF of pipeline (up to 30" diameter) and five (5) pumping stations. The Borough of Clearfield and Lawrence Township own and maintain sewage collection systems that are tributary to the interceptor sewers. Clearfield Borough and Lawrence Township provide reports for the Authority's annual Chapter 94 waste load management report including any maintenance, connections and extensions to their collection systems.

Before 2004, the Authority had ten (10) combined sewer overflow locations. The Authority has since permanently closed three of the overflows and temporarily closed two more. The overflows that were temporarily closed are operated manually by a slide gate and are only operated in an emergency. Four of the five remaining overflows are also manually controlled and used to relieve the treatment facility of excessive wet weather flow. Figure 2-2 shows the existing overflow discharge points and tributary areas. This figure also includes the interceptor sewer system showing those conveyance facilities owned and maintained by the Clearfield Municipal Authority.

Over the last 15 years, the Authority has made significant improvements to its interceptor sewer system. The Authority has reduced extraneous system flows and maximized conveyance capacity. Since 1989, the Authority has invested $2.5 million for 20 sewer system projects.

Table 2-2 shows the infiltration potential of the interceptor and collection system by contributing municipality/system owner. The Clearfield Borough collection system has the most inflow potential (40.7%) relative to Lawrence Township (24.8%) and Clearfield Municipal Authority (34.5%). Also, Clearfield Borough has the largest sewer system, in terms of pipe footage (126,050 LF or 39.8%), relative to Lawrence Township (105,400 LF or 33.2%) and Clearfield Municipal Authority (85,300 LF or 26.7%). The table reflects data for the 2004 sewer system and does not include recent Township/Borough upgrades and replacements. However, the relevant infiltration potential (in-miles) has not changed appreciably.

Table 2-2: Sewer System Tabulation and Infiltration Potential (By System Owner)

System Owner	Type System	Dia. (in.)	Length (ft.)	In-Miles	In-Miles (% Total)
Clearfield Borough	**Collection**	6	3,700	4.20	0.62
		8	51,850	78.56	11.54
		10	21,200	40.16	5.90
		12	17,900	40.68	5.98
		15	8,700	24.72	3.63
		18	12,700	43.30	6.36
		24	10,000	45.45	6.65
Sub-Total, Clearfield Borough		11.6 (Avg.)	126,050	277.07	40.68
Lawrence Township	**Collection**	8	87,300	132.27	19.42
		10	11,500	21.78	3.20
		12	6,600	15.00	2.20
Sub-Total, Lawrence Township		8.5 (Avg.)	105,400	169.05	24.82
Clearfield Municipal Authority	**Interceptor**	8	7,710	11.68	1.72
		10	12,000	22.73	3.34
		12	20,870	47.43	6.96
		14	1,050	2.78	0.41
		15	22,310	63.38	9.31
		16	3,550	10.76	1.58
		18	6,540	22.30	3.27
		24	8,970	40.77	5.99
		30	2,300	13.07	1.92
Sub-Total, Clearfield Mun. Auth.		14.5 (Avg.)	85,300	234.90	34.50
TOTAL, ALL SYSTEMS		11.4 (Avg.)	316,750	681.02	100.00

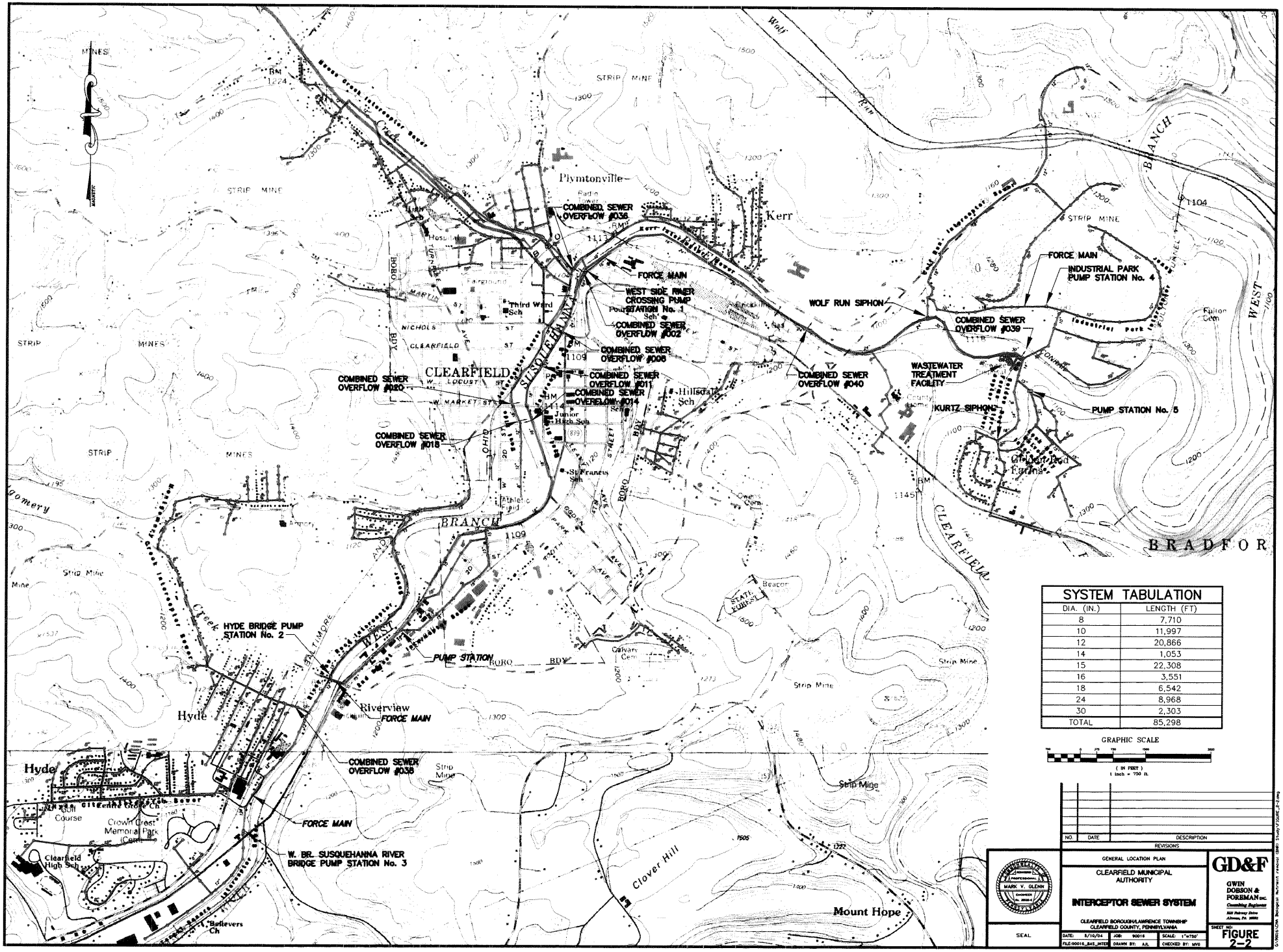

SYSTEM TABULATION	
DIA. (IN.)	LENGTH (FT)
8	7,710
10	11,997
12	20,866
14	1,053
15	22,308
16	3,551
18	6,542
24	8,968
30	2,303
TOTAL	85,298

GRAPHIC SCALE

(IN FEET)
1 inch = 750 ft.

NO.	DATE	DESCRIPTION

REVISIONS

GENERAL LOCATION PLAN

CLEARFIELD MUNICIPAL AUTHORITY

INTERCEPTOR SEWER SYSTEM

CLEARFIELD BOROUGH/LAWRENCE TOWNSHIP
CLEARFIELD COUNTY, PENNSYLVANIA

MARK V. GLENN

SEAL

DATE: 5/10/04 | JOB: 90016 | SCALE: 1"=750'
FILE: 90016_BAS_INTER | DRAWN BY: AJL | CHECKED BY: MVG

GD&F
GWIN DOBSON & FOREMAN INC.
Consulting Engineers
3121 Fairway Drive
Altoona, Pa. 16602

SHEET NO.
FIGURE 2-2

The Clearfield Municipal Authority, Lawrence Township, Clearfield Borough and the PADEP entered into a four-party Consent Order and Agreement (CO&A) on April 12, 2007. The document provides a time frame for all sewer improvement work that should eliminate excessive inflow and infiltration that are the cause of combined sewer overflows. In fact, the Authority has made these replacement projects an integral part of its Long-Term CSO Control Plan.

Over the last five years, Clearfield Borough has undertaken a $33 million sewage collection system largely funded by the Pennsylvania Infrastructure Investment Authority. The Borough replaced sanitary sewer mains and laterals via five separate contracts. Contract No. 1 included 28,001 linear feet of new sanitary sewer main, 126 manholes, 25,497 linear feet of laterals and 3,285 liner feet of storm sewer. Contract No. 2 included 16,583 linear feet of new sanitary sewer main, 86 manholes, 12,070 linear feet of laterals and 1,224 linear feet of storm sewer. Contract No. 3 included 2,624 linear feet of new sanitary sewer mains, 15 manholes, 1,472 linear feet of laterals and 52 linear feet of storm sewer. Contract No. 4 included 4,687 linear feet of new sanitary sewer mains, 24 manholes, 3,844 linear feet of laterals and 674 linear feet of storm sewer. Contract No. 5 included the replacement of more than 25,000 linear feet of sanitary sewers.

In 2002, Lawrence Township completed a $3.4 million sanitary sewer improvement project. The Township is undertaking a supplemental project to replace other deficient lines.

When completed, the Borough and Township sewer replacement project will approach $40 million. The Authority has completely relied on these projects for achieving its Long-Term CSO Control Plan which are the elimination of all combined sewer overflows in the system while not exceeding the hydraulic design capacity of the wastewater treatment facility. If these projects fail to achieve CSO reduction, the Authority will be forced to undertake the necessary CSO control including plant expansion. The following project task activity schedule, as codified in the April 12, 2007 Consent Order and Agreement, is shown in Table 2-3.

Table 2-3: Long-Term Combined Sewer Overflow (CSO) Control Plan Implementation Schedule

1.	Start Construction of the Clearfield Borough Phase II CSO Separation Project	March 31, 2007
2.	Submit Part II WQM Permit for the Clearfield Borough Phase III CSO Separation Project	March 31, 2007
3.	Construction Completion of Clearfield Borough Phase I CSO Separation Project	June 30, 2007
4.	Construction Completion of Clearfield Borough Phase IA CSO Separation Project	September 30, 2007
5.	Submit Part II WQM Permit for the Lawrence Township Phase 2 Project	January 31, 2008

6.	Start Construction of the Clearfield Borough Phase III CSO Separation Project	September 30, 2008
7.	Complete Construction of the Clearfield Borough Phase II CSO Separation Project	November 30, 2008
8.	Start Construction of the Lawrence Township Phase 2 Project	May 31, 2009
9.	Construction Completion of the Phase III CSO Separation Project	June 30, 2010
10.	Construction Completion of the Lawrence Township Phase 2 Project	June 30, 2010
11.	Begin Receiving Stream Monitoring	September 1, 2010
12.	Completion of Lawrence Township Collection System Flow Monitoring to Determine Project Effectiveness with Data Compilation	June 30, 2011
13.	Completion of Clearfield Borough Collection System Flow Monitoring to Determine Project Effectiveness with Data Compilation	June 30, 2011
14.	Complete CSO Control Alternatives Evaluation/CSO Stream Monitoring, If Required	December 30, 2012
15.	Complete Cost/Performance Considerations, If Required	December 30, 2013
16.	If Required, Complete Design of CSO Control Facilities	December 30, 2014
17.	If Required, Complete CSO Control Facilities Construction/Begin Post Construction Monitoring	December 30, 2017
18.	If Required, Complete CSO Post-Construction Monitoring/ Effectiveness at LTCP	December 30, 2019

The Authority will be unable to quantify the affect of the sewer replacement projects until 2012. For purposes on this report, estimates of hydraulic flow capacity will provide relative magnitudes of cost comparison.

2.3 Process Flow Description

2.3.1 Raw Wastewater Flow Pattern

The CMA WWTF currently utilizes coarse bar screens and a gravity grit chamber for preliminary treatment. Activated sludge aeration and final settling are the facility's main treatment processes (a suspended-growth, biological treatment system) to reduce effluent concentrations of BOD_5 and suspended solids. An equally important requirement is that wet-weather flow reaching the facility be treated, including first-flush CSO. A by-product of the process is waste sludge or biosolids, which requires its own handling and treatment processes, as well as final disposal.

The treatment process at the WWTF includes preliminary treatment (grit removal and coarse bar screens), primary settling, activated sludge system, secondary settling and disinfection (via chlorination). Waste sludge is processed through a gravity thickener, anaerobic digesters and centrifuge system with agricultural land application to area farms.

Raw sewage enters the plant via a 36" gravity interceptor sewer. Flow is processed through preliminary treatment, which consists of grit removal and coarse bar screening. During high flow/wet-weather events, flow can bypass the pretreatment process.

Raw sewage is then pumped to an influent distribution structure, which divides the flow into two primary settling tanks (PSTs). Effluent from the PSTs enters the primary effluent distribution box and then to the activated sludge aeration tanks. A bypass is available at the primary effluent distribution box to divert excess flow directly to the chlorine contact chambers.

Effluent from the activated sludge tanks is directed to secondary settling tank (SSTs) in a combined reactor-clarifier tank. Overflow from the SSTs enter a chlorine contact chamber for disinfection and then discharged via a 24-inch outfall sewer to the West Branch of Susquehanna River.

The site layout and process flow schematic of the existing plant are shown in Figure 2-3 and Figure 2-4, respectively.

2.3.2 Sludge Handling

Activated sludge is recovered from the SSTs. The sludge is either returned to the aeration tanks (return activated sludge, RAS) or conveyed to the sludge handling/processing facility as waste activated sludge (WAS). WAS is processed through the following processes: thickening, anaerobic digestion and dewatering (via a centrifuge). The processed sludge is disposed through agricultural land application. Filtrate from dewatering process is returned to the primary influent distribution box.

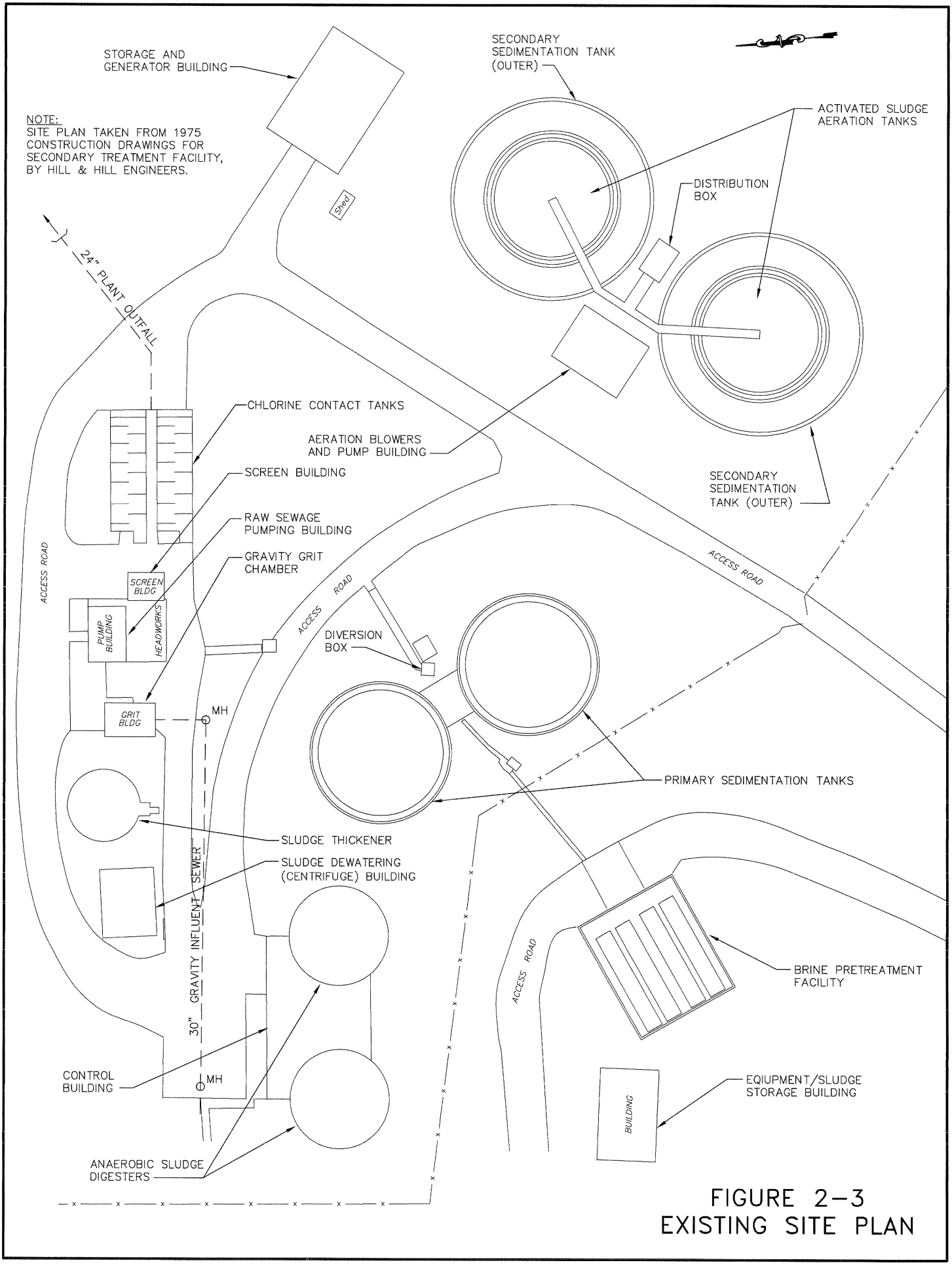

FIGURE 2-3
EXISTING SITE PLAN

G:\90016\CMA Biological Nutrient removal (BNR) Study\FIGURE_2-3.dwg

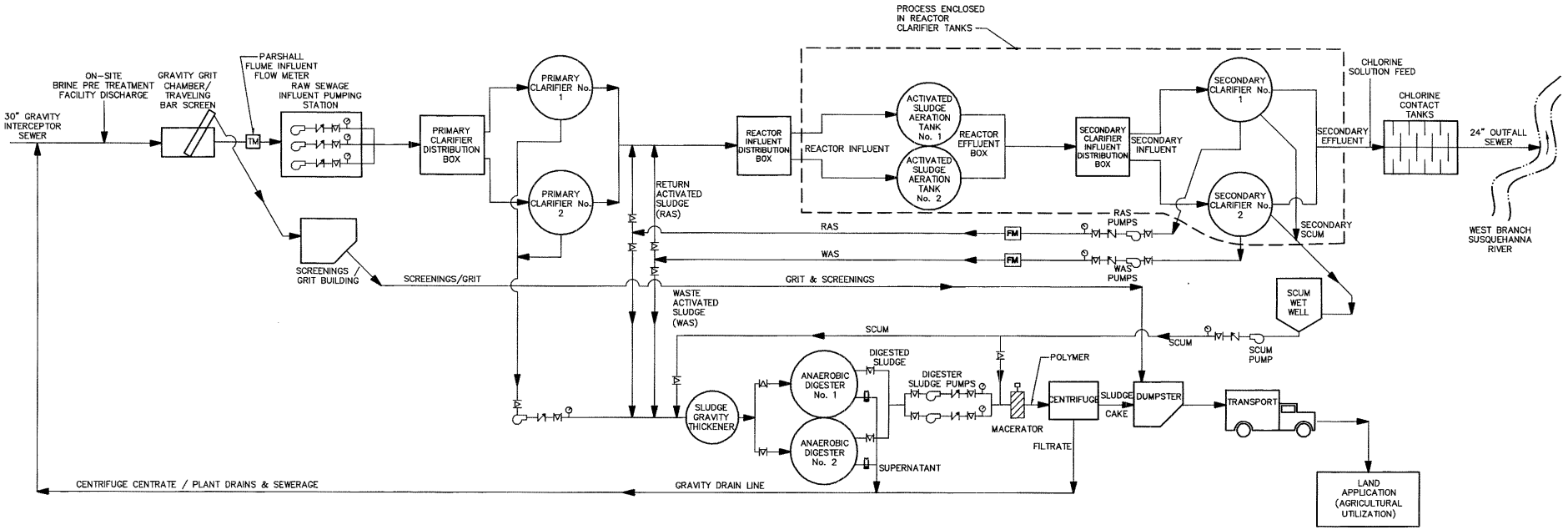

FIGURE 2-4
EXISTING PROCESS SCHEMATIC

G:\90016\CMA Biological Nutrient removal (BNR) Study\FIGURE_2-4.dwg

2.4 Assessment of Existing Facilities and Equipment

A critical analysis on the attributes of each existing individual unit process and associated equipments and facilities is necessary. When considering NRT upgrade options, a close examination of facility's current treatment processes must be conducted to determine which unit process(es) should be modified and what major constraints are to be applied to the NRT process selection.

2.4.1 Preliminary Treatment

Effective screening and grit removal is critical to the performance of the activated sludge process and the final settling tanks. The impact on the settling tanks is related to the quality and amount of sludge to be removed. High amounts of coarse particles in the settling tanks may decrease the efficiency of the pumps and reduce the overall contaminant removal efficiency of the entire treatment process. The preliminary treatment process (i.e. headworks) currently employed at the CMA WWTF includes screening and grit removal. The unit consist of a reduced velocity, gravity grit chamber and self-cleaning, coarse bar screen, both contained within a pretreatment area. These processes are discussed in further detail in the following sections.

2.4.1.1 Influent Hydraulics

A 36-inch outfall sewer discharges to the grit chamber. The capacity of this line is about 13 MGD. It was replaced with a 36-inch ductile iron pipe in 1991 at a cost of $125,000. The line is quite deep (25-30 feet).

Assessment

The 36-inch plant influent sewer is relatively new and in good condition. However, the excessive depth of the line causes difficulties to retrofit/replace the existing pretreatment process at the current location. In all likelihood, the plant outfall sewer and pretreatment process will have to be relocated farther upstream to avoid problems of excessive depth and related cost.

2.4.1.2 Grit Chamber

Plant influent enters a reduced-flow gravity grit chamber device. The existing grit chamber is unaerated, which is suitable for an NRT process upgrade. A grit classifier collects accumulated grit and pumps the material to a dumpster near the screenings building. A bypass channel is adjacent to the grit chamber, which is used to divert excess flow to the river. Refer to Figure 2-5 for views of the existing chamber.

Figure 2-5: Grit Chamber

Assessment

The existing grit chamber continues to operate and could be used in a plant upgrade that utilized existing process treatment units for BNR removal. The grit system has the advantage of gravity particle separation, thus minimizing carbon loss in the raw sewage. However, operators report that the process is very maintenance intensive and located in a corrosive and restrictive confined space. The depth of the grit chamber/grit classifier system will be difficult to retrofit or replace. More modern and efficient systems exist that are considered more viable and operator friendly while achieving a higher level of particle removal.

2.4.1.3 Bar Screens

A self-cleaning, course bar screen protects the plant from inert solids. These solids can cause physical damage and reduce the efficiency of downstream equipment and processes.

Assessment

Screening and grit removal equipment have limited serviceability due to corrosion and wear and are maintenance intensive. Although the bar screen operates effectively, it was installed during the 1994 renovation project, so is likely past the midway point of its expected design life. Moreover, according to the operating staff at plant, the existing screen generally poses very frequent maintenance and repair tasks. In addition, the coarse (1") bar spacing and resulting inability to remove smaller solids and debris particles make the screens less suited for the desired increased efficiency of downstream processes (clarifiers, new NRT, etc.). For NRT processes, fine screens with ¼'' openings are suited best. So it is advisable to replace the existing coarse bar screens with fine screens.

Figure 2-6: Bar Screen

2.4.2 Main Pumping Station

The main pumping station at the plant is equipped with two Aurora® non-clog, variable speed sewage pumps and one constant speed pump. Each is rated at maximum speed of 1,150 rpm at 48-feet total dynamic head to deliver 1,800 GPM. Total capacity of the pumping system is 7.8 MGD. The pump drivers are 30 HP units wound for 440 volts, 3 phase, 60 cycle power. Pumps are utilized to lift effluent sewage from the bar screen to the primary influent distribution box.

Apart from sewage pumps, a grit pump is also used for pumping accumulated grit from the headworks building to the grit classifier and then to the gravity thickener. Refer to Figure 2-7 and Figure 2-8 for the sewage pump and grit pump, respectively.

Assessment

The plant operating staff maintains the pumps in good condition, and apart from regular maintenance problems, may be sufficient for the near future. The system could function in an NRT upgrade option that uses the existing facility. The capacity of the station may be insufficient for peak flows in excess of plant capacity.

Figure 2-7: Influent Pump

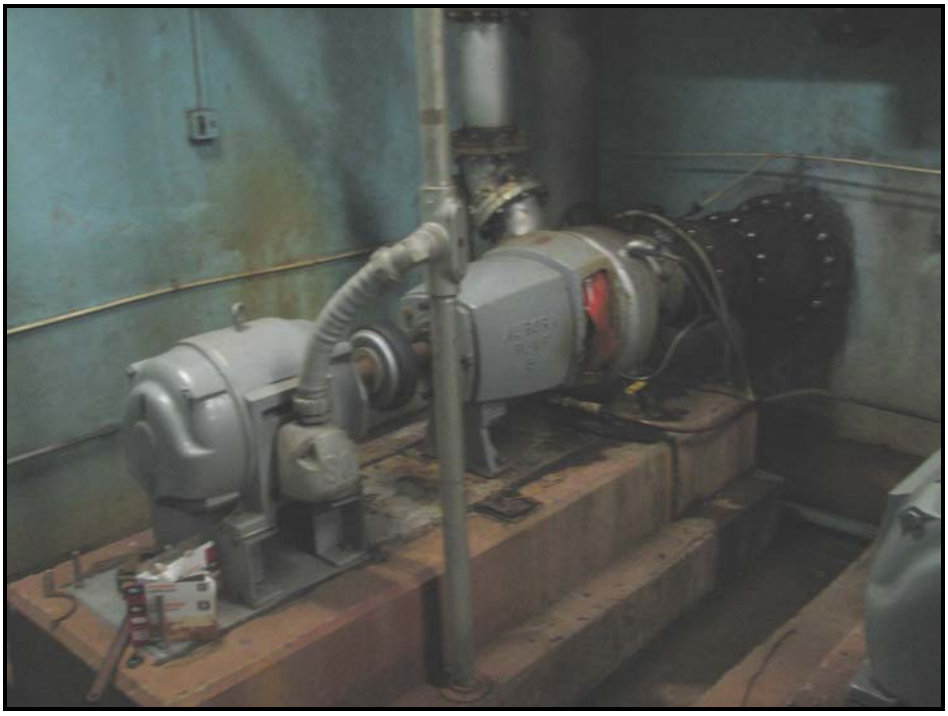

Figure 2-8: Grit Pump

2.4.3 Primary Influent Distribution Structure

Sewage is pumped from the headworks building to the primary influent distribution box. This structure was constructed in 1977 during the last upgrade project. Weirs in the distribution box divide the flow equally between the primary settling tanks (PSTs) for initial sedimentation.

Assessment

The distribution structure is in good condition and performs its designated function. The structure can be used in an NRT process utilizing components of the existing plant (i.e. primary sedimentation).

2.4.4 Primary Sedimentation Tanks (PSTs)

The existing primary settling tanks were built in 1960. They were designed to handle an average flow of 1.5 MGD and to remove 35% BOD_5. The PSTs are 60-feet in diameter and 11-feet deep (SWD). The total volume of the PSTs is 466,000 gallons. Please refer to Table 2-4 and Figure 2-9 for the hydraulic and settling characteristics of this tankage.

Table 2-4: Primary Settling Tank Characteristics

Unit Process Item	Primary Clarifiers	
	North	South
Length (ft)	-	-
Width (ft)	-	-
SWD (ft)	11.00	11.00
Radius (ft)	30	30
Surface Area (ft^2)	2,827	2,827
Total Surface Area (ft^2)	5,655	
Volume (ft^3)	31,100	31,100
Volume (gal)	233,000	233,000
Combined Volume (gal)	466,000	
ADF HDT (hours)	4.05	
MDF HDT (hours)	1.78	
ADF SOR (gpd/ft^2)	490	
MDF SOR (gpd/ft^2)	1,110	
Observed ADF (MGD)	2.76	
Observed MDF (MGD)	6.29	

SWD: Side Water Depth
ADF: Average Daily Flow
MDF: Maximum Daily Flow
HRT: Hydraulic Detention Time
SOR: Surface Overflow Rate
MGD: Million Gallons per Day

The condition of the concrete is considered fair-to-good based on an inspection during the 2003 upgrade project. The primary settling mechanisms and fiberglass weirs were replaced in the last 5 years and are in excellent condition.

The surface overflow rate (SOR) of the PSTs at ADF are currently in the range specified by DEP. However, the SOR increases significantly as the flow increases especially to maximum daily flows of 6 MGD or more (1,000 GPD/SF or higher). An increase in SOR leads to decrease in the settling performance of the PSTs.

Assessment

The primary settling tanks are in a serviceable condition for an NRT process that utilizes the existing facility. A philosophical design question is posed for the need of primary treatment in an NRT process. However, the primaries are well adapted to the anaerobic sludge digestion system since waste sludge is routinely directed to the digesters. In addition, since the sludge thickener may be used as a carbon fermenter for one of the NRT options, the fermentation of primary waste sludge (maximum carbon concentration) is both beneficial and desirable.

The recent replacement of the primary mechanisms and weirs have extended the useful life of the primary tanks which would coincide with any compatible NRT process. Also, increased hydraulic design loadings would not affect the primary settling tanks because peak flows would be step-fed around the process.

Figure 2-9: Primary Settling Tank

2.4.5 Activated Sludge Aeration Tanks

The existing aeration tanks (or reactors) were originally designed in 1976. They operate as complete mix, activated sludge (CMAS) reactors to achieve single-stage carbon oxidation. The CMAS process was chosen due to the resultant benefits of its ability to handle a wide range of flows and because fewer treatment units were required. Coarse bubble, swing-type air diffusers are used to accomplish aeration and mixing in the tanks.

An adjoining building near the aeration tank basins contains return sludge pumps and aeration blowers. The building was constructed in the 1977 and appears to be in fair condition.

The two aeration tanks are arranged for parallel operation in a reactor-clarifier configuration. A distribution structure equally directs flow to each tank. The tanks are 14.75-feet deep and provide a combined capacity of 900,000 gallons. Each tank surrounds a clarifier, which has diameter of 55-feet. Effluent from the aeration tanks overflows to the clarifiers for settling of sludge. Please refer to Table 2-5 and Figure 2-10 for reactor characteristics. Combined reactor clarifiers were commonly employed in the 1970's-80's because of the economical use of tankage and cost savings resulting from inter-tank piping. We have not assessed the condition of concrete tankage, but the operators report no major structural problems. The hydraulic characteristics of the aeration tank are shown in the following table.

Table 2-5: Aeration Tank Characteristics

Unit Process Item	Aeration Tanks	
	North	South
Length (ft)	249	249
Width (ft)	14	14
SWD (ft)	14.67	14.67
Radius (ft)	-	-
Surface Area (ft^2)	3,192	3,192
Total Surface Area (ft^2)	6,384	
Volume (ft^3)	51,700	51,700
Volume (gal)	387,000	387,000
Combined Volume (gal)	774,000	
ADF HDT (hours)	6.73	
MDF HDT (hours)	2.95	
Observed ADF (MGD)	2.76	
Observed MDF (MGD)	6.29	

SWD: Side Water Depth
ADF: Average Daily Flow
MDF: Maximum Daily Flow
HRT: Hydraulic Detention Time
SOR: Surface Overflow Rate
MGD: Million Gallons per Day

Assessment

Based on the limited volume of the aeration tank, detention times are reduced during peak flows. For instance, at a projected peak daily flow of 13.5 MGD, the detention time is 1.4 hours. At the current permitted plant capacity of 4.5 MGD, the detention time is 4.1 hours, which is marginally sufficient for an activated sludge process. PADEP requires 4 hours of detention time for an activated sludge process and up to 12 hours (but typically 8 hours) for a nitrification process (ammonia nitrogen removal). In addition, low mixed liquor responded solids are indicative of occasional dilution and possible solids washout during periods of high flow.

Given the NRT process requirements, the existing tankage will not be sufficient for rated plant capacity, let alone potential future peak flow. Therefore, certain flows need be step-fed around the existing tankage for chemically enhanced settling. The existing tanks can be retrofitted for an NRT process, but at a reduced flow.

Figure 2-10: Aeration Tank, Circumference Around a Clarifier

The extensive sampling analysis performed during November 2007, revealed comparatively low concentrations of (300-700 mg/L) of mixed liquor volatile suspended solids in the aeration tanks. It was also evident from the fact that most of the NH_4-N entering plant was leaving the plant without nitrification. Thus, to ensure higher solids retention time (or less washout) and hence higher nitrification, nitrate sludge must be recycled at a higher rate.

The existing aeration tanks use coarse bubble air diffusers for aeration and mixing purposes. Coarse bubble diffusers are less economical and have less oxygen transfer efficiency compared to fine bubble air diffusers. Thus, the existing diffusers needs to be replaced by fine bubble diffusers for increased mixing and oxygenation required in NRT oxic zones. The existing aeration blowers are not sufficient for the higher pressures of a fine bubble diffused air system. The blowers will be replaced in an NRT process using the existing facility. The blower building should be serviceable without major modifications.

The existing aeration tanks operate in a complete-mix rate (CMAs), which is not the most efficient approach for the NRT process. Plug flow reactors (PFRs) are more suitable for nutrient removal processes. Thus, the existing CMAS reactors need to be converted into PFR reactors. This can be achieved by dividing the existing tanks into two halves by using baffle walls for the NRT oxic zones.

In summary, the existing activated sludge units can be retrofitted in an NRT process at a reduced flow. High flows must be step-fed around the process. Also, fine bubble diffusers and new aeration blowers will be required.

2.4.6 Secondary Sedimentation Tanks

The CMA WWTF utilizes two secondary settling tanks for final settling of solids from the activated sludge process with provision for return activated sludge. The tanks have a side-water depth of 8-feet and an effective surface area of 2,550 ft^2 for a combined area of 5,100 ft^2. The tanks provide a total volume of 300,000 gallons. As mentioned earlier, SSTs are surrounded by an outer ring of aeration tanks in a reactor-clarifier tank. Refer to Figure 2-11 and Table 2-6 for hydraulic characteristics.

The existing sedimentation mechanisms and overflow weirs were constructed with the reactor-clarifiers in 1977. These mechanisms and weirs are reported to be in fair condition and could be serviceable in the future with continued maintenance. It is noted that the life of the original primary settling mechanisms was 45 years until their replacement in 2003.

Table 2-6: Secondary Settling Tanks Characteristics

Unit Process Item	Secondary Clarifiers	
	North	South
Length (ft)	-	-
Width (ft)	-	-
SWD (ft)	8.00	8.00
Radius (ft)	28.5	28.5
Surface Area (ft^2)	2,552	2,552
Total Surface Area (ft^2)	5,104	
Volume (ft^3)	20,400	20,400
Volume (gal)	153,000	153,000
Combined Volume (gal)	306,000	
ADF HDT (hours)	2.66	
MDF HDT (hours)	1.17	
ADF SOR (gpd/ft^2)	540	
MDF SOR (gpd/ft^2)	1,230	
Observed ADF (MGD)	2.76	
Observed MDF (MGD)	6.29	

SWD: Side Water Depth
ADF: Average Daily Flow
MDF: Maximum Daily Flow
HRT: Hydraulic Detention Time
SOR: Surface Overflow Rate
MGD: Million Gallons per Day

Assessment

The SSTs were designed for a peak flow of 5.5 MGD but they have consistently seen high flow of 6.0 MGD or higher. Peak flows of this magnitude have stressed the activated sludge process and particularly mixed liquor suspended solids concentrations critical for return activated sludge. At the current daily average flow of 2.76 MGD, surface overflow rate (SOR) is about 540 gpd/ft^2, which is under the range specified by DEP (800-1,200 gpd/sf^2). However, at higher flows (such as 6.3 MGD or above) the SOR increases to 1,230 gpd/ft^2 causing decrease in the performance of the clarifiers and hence of the entire system.

In summary, the secondary clarifiers could be used in an NRT process utilizing the existing facility. The secondary clarifiers could be used in a process where peak flows do not exceed 6.0 MGD and as long as the upstream CSO's are still functioning (i.e. existing conditions). However, if the ongoing sewer replacement projects are not effective in reducing total system peak flow, additional clarifiers and/or NRT reactor capacity will be required.

Figure 2-11: Secondary Settling Tank

2.4.7 Chlorine Disinfection

The secondary effluent is disinfected using free chlorine gas (through solution feed water) as the disinfecting agent. The WWTF has two contact chambers, which are 10.5-feet deep (SWD), 55-feet long and 15-feet wide. Each tank has the volume of 60,000 gallons and provides a detention time of 30 minutes at a flow of 3.0 MGD and 15 minutes at 6.0 MGD. The chambers utilize plug flow mechanics. Refer to Figure 2-12. The original chlorine contact tank was constructed in 1959 and was supplemented with a new tank in 1977. The condition of the concrete tanks and chlorine feed equipment appear to be in fair-to-good condition.

Assessment

As the NPDES permit does not include dechlorination or zero chlorine limits, the existing contact tanks could be used in an NRT process upgrade. However, if peak flows exceed 6.0 MGD, additional chlorine contact tanks and feed facilities will be needed. In this event, it is advisable to switch to UV disinfection. UV disinfection is safer and more efficient in operation. Also, the threat of stream toxicity is eliminated by use of UV.

Figure 2-12: Chlorine Contact Chamber

2.4.8 Solids Handling System

The major components of the solids handling system at the WWTF are comprised of the following elements:

1. Thickening (Gravity Sludge Thickener)
2. Digestion (Two Anaerobic Digesters)
3. Dewatering (Centrifuge)
4. Disposal (Agricultural Land Application)

General

The current sludge handling configuration consists of 1) pumping waste activated sludge solids to the sludge thickener, 2) pumping thickened solids to the primary (West) Anaerobic Digester, 3) transferring primary (West) Digester solids to the secondary (East) Digester through an equalization line and 4) pumping digested sludge from the secondary Digester to the centrifuge for dewatering.

Figure 2-13: RAS and WAS Pumps

Sludge transfer of waste activated sludge (WAS) from the settling tanks to the digesters is accomplished through an interconnected pumping/piping system which provides for a flexible flow pattern using sludge thickening as an intermediate process. Also, scum from the primary and secondary settling tanks are pumped to the gravity thickener. The condition of the transfer pumps and mechanical piping is in fair-to-good operating condition due to regular maintenance by operating staff. Please refer to Figure 2-13.

Thickening

The existing gravity thickener at the WWTF is 6.3-feet deep with a 30-foot inside diameter. The total volume of the thickener is 30,000 gallons. Refer to Figure 2-14. The thickener was constructed in 1977 as part of the plant upgrade and expansion project. The thickener mechanism is over 30 years old, but should be in a functional condition for an additional 10-15 years. No physical observations have been made of the mechanisms.

Based on data provided by operating personnel, thickened sludge had the following characteristics: Average Volume Solids - 4.7%, Average Volatile Solids - 75%, Hydraulic Retention Time - 6.3 days, Average Digester Flow - 4,770 gpd and Average Solids Loading - 3 lb/sq ft/day. However, the digester flow meter is not considered accurate and the figures provided are estimated. The performance data from the digesters suggest that volume solids and average volatile solids appear to be within standard parameters. But, the hydraulic retention time appears to exceed 1-2 days (standard) and the solids loading rate is low (under 8 $lb/ft^2/day$) indicative of low waste activated sludge concentration and, therefore, low mixed liquor suspended solids and low return activated sludge.

Figure 2-14: Sludge Thickener

Digestion

The objectives of the anaerobic sludge digestion process (Figure 2-15) are to oxidize organics to stable end products, reduce the mass and volume of sludge and condition the sludge for solids disposal, i.e. agricultural land application purposes. The two digesters function in series with waste activated sludge from the thickener entering the primary digester and then into secondary digester. Each digester is 22-feet deep with an inside diameter of 45-feet. The volume of each digester is 260,000 gallons, providing a combined digester volume of 520,000 gallons.

The anaerobic sludge digestion system was completely replaced in 2005. An Eimco® high rate sludge mixing system was installed with new floating covers. The sludge heating was also replaced. The upgrade of the system, in conjunction with the new centrifuge dewatering system, has greatly enhanced operating efficiency and performance. The sludge mixing system, in particular, has enhanced sludge stabilization and created a more consistent sludge product for dewatering and land application purposes.

The digesters are in integral part of a reinforced concrete/brick facade control building. The roof was recently replaced in 2007. The condition of the building should be serviceable for the immediate future although the operator's room and laboratory are confined and lack adequate space.

The quality of stabilized generally varies from 1.7 to 3.4%, volume of solids. The hydraulic retention time from 2005 to 2007 has averaged 77.5 days which may be considered typical for anaerobically digested solids. The average daily flow of stabilized solids for dewatering (cake solids) and land application (liquid solids) is 6,700 gallons/day. The difference between the flow to the thickener (4,700 gpd) may indicate unthickened waste solids are directly sent to the anaerobic digesters or errors with the thickener flow meter.

Figure 2-15: Anaerobic Sludge Digester Floating Cover

Dewatering

Conditioned sludge from the secondary digester is pumped to the centrifuge, which is located inside a building next to the thickener. The centrifuge unit used at the CMA WWTF is a Centramax® model by US Filter. The unit is 111-inches long, 54-inches wide and 43-inches deep. It is mounted horizontally on a concrete base. It has the capacity to dewater 50-100 gpm of digested sludge. Polymer is fed through a feed system to enhance the dewatering process. The unit was installed in 2005 with consistent solids percentages of 25-30%. The centrifuge operates about 2 days per week, and 8-9 months per year. Operating data from 2005-2007 shows an average of 820 lb/day or 150 dry tons/year from this operation. This equates to about 62% of the total solids disposed at the WWTF. The remaining solids (38%) are applied in liquid for about 3-4 months per year at 505 lbs/day or 62 dry tons/year.

Disposal

The ultimate means of biosolids disposal is agricultural land application at two area farms. The Conkey site (35 acres) is located adjacent to the plant and frequently receives liquid solids that are transported directly to the site. The Sankey site (43 acres) is located several miles form the plant and therefore, receives cake solids. Liquid solids are applied by a tanker truck with a nozzle applicator and cake solids applied by manure spreader. A new sludge storage building was constructed in 2005 for winter storage of dried solids. The chemical biological analysis of the digested sludge is provided in the following Table 2-7.

Table 2-7: Trace Elements Concentration in Biosolids Generated

Pollutant	Average Concentration CMA Sludge (mg/kg)	Maximum Concentration CMA Sludge (mg/kg)	Concentration Limit (mg/kg)
Arsenic	5.9	20	75
Cadmium	11.5	26	85
Chromium	44.8	85	---
Copper	39.0	581	4,300
Lead	79.4	126	840
Mercury	0.9	3.42	57
Molybdenum	<10	41	75
Nickel	56.2	92	420
Selenium	5.1	10	100
Zinc	975.3	1,211	7,500

Table 3-8: Fecal Coliform Survey Results

Sample Date	Digestor (Primary/secondary)	Geometric Mean (Mpn/g)
March 20, 2000	Primary	51,900
December 6, 2000	Secondary	4,437
December 11, 2000	Primary	10,019
December 12, 2001	Primary	109,960
April 8, 2002	Primary	17,009
April 8, 2002	Secondary	4,185

The chemical and biological data indicated that the sludge meets Class B pathogen limits under USEPA guidelines.

Assessment

The recent upgrades to the anaerobic sludge digestion and dewatering system have greatly enhanced the stabilized sludge product, reduced operating costs, provided more consistent performance and increased ease of operation. The decision to construct a new facility will require a design decision on the use of either aerobic or anaerobic digestion. Regardless, the existing sludge system can certainly be integrated in an NRT process.

Section 3: Evaluation of NRT Process Options

3.1 Introduction

Several NRT options exist for achieving BNR compliance. Evaluation factors included site constraints, hydraulic profile, existing process, operation and maintenance (O&M) and capital cost. Through a screening of available NRT systems, the most viable processes will be further evaluated for the WWTF. Following this preliminary evaluation, a detailed alternatives evaluation of viable processes will be conducted, including process computer modeling, site layout, capital cost estimates and O&M costs.

While evaluating options, due consideration was given to the future effectiveness of the Clearfield Borough and Lawrence Township sewer separation projects. The success of those projects will depend on CSO elimination and reduction of peak flow to the treatment facility. For evaluation purposes, we have included projections of peak flow (13.5 MGD) to the plant.

3.2 Preliminary NRT Evaluation

From the outset of the project, several NRT processes were quickly evaluated to determine viable options for the WWTF. The following options were screened on a preliminary basis. Table 3-1 shows the results of this preliminary evaluation.

- Biological Nutrient Removal (BNR) NRT:
  - Plug-Flow Activated Sludge (single-stage) NRT Process Upgrade (Modified Ludzack-Ettinger [MLE], University of Cape Town/Virginia Initiative Plant [UCT/VIP], Johannesburg, etc.)
  - Plug-Flow Activated Sludge (single-stage) NRT Process Upgrade with Step-Feed
  - Integrated Fixed-Film/Activated Sludge (IFAS [plastic media], single-stage)

- State of the Art (SOA) NRT:
  - Plug-Flow Activated Sludge (single-stage) NRT Process Upgrade (as above) with Denitrification (DN) Sand Filters
  - Plug-Flow Activated Sludge (single-stage) NRT Process Upgrade (as above) with Membrane Bioreactors (MBR)

Table 3-1: Preliminary NRT Process Evaluation Results

Process Option	Result	Reason
IFAS (plastic media)	Do Not Evaluate	Prohibitive capital cost.
Plug-Flow Activated Sludge NRT Process Upgrade with DN Sand Filters	Cursory Evaluation Only	Discussion/screening only, may not be applicable for current NPDES permit limits.
Plug-Flow Activated Sludge NRT Process Upgrade with MBR	Do Not Evaluate	Not needed to meet the current NPDES permit nutrient limits.
Plug-Flow Activated Sludge NRT Process Upgrade with Step-Feed (MLE, UCT/VIP, Barden pho, etc.)	Evaluate MLE/ VIP Only	Adaptable to existing process; step-feeding at higher flows protects limited capacity reactors.

Some processes such as IFAS and MBR were eliminated from further investigation because of capital cost or incompatibility with existing operations. Other options were modeled to assess their performance in meeting the proposed effluent limits. A discussion of DN filters advantages and disadvantages will be done on a cursory basis.

As shown above, the Plug-Flow, Activated Sludge MLE/VIP Process with step feed will be evaluated further through Biowin® modeling. The use of step-feeding is a necessary improvement in the process because of high flow potential of the upstream sewer system.

The stand-alone MLE/VIP process will be evaluated with the step-feed option on the assumption that improvements to the existing processes will be performed as part of the upgrade.

3.3 NRT Modeling Evaluation

Based upon preliminary modeling results, the single stage step-feed MLE/VIP process (with supplemental chemical feeding) has been selected as the best process option to meet the proposed effluent limits while maximizing use of the existing facilities. However, the option will require upgrades/retrofits, to varying degrees of existing equipment and the construction of additional reactor and settling capacity.

As discussed in Section 2.2, the current permitted ADF is 4.5 MGD with annual effluent nutrient loadings of 82,191 lbs/yr for total nitrogen (TN) and 10,959 lbs/yr for total phosphorus (TP). These loadings equate (based upon the permitted ADF) to annual average concentration limits of 6 mg/l (TN) and 0.8 mg/l (TP). However, NPDES effluent limits do not include instantaneous concentrations for TP, TN or Ammonia Nitrogen (NH_3-N).

Therefore, the NRT modeling and facility/process upgrade recommendations are to be based upon the abovementioned nutrient limits (TN ≤ 6 mg/L, TP ≤ 0.8 mg/L), which are based upon the design ADF of 4.5 MGD.

As indicated by preliminary modeling, the proposed processes have little difficulty in removing phosphorus at average flows. Only peak flows, which are currently unknown, could cause concern. However, with increased treatment capacity, the amount of TP at peak flow should be significantly reduced. With extra settling capacity, additional measures to remove phosphorus (chemical precipitation, etc.) should not be needed.

It should be noted that CMA complies with the phosphorous limits because annual average daily flows do not exceed plant capacity. A significant portion of flow is diverted through upstream CSO's along with an undetermined amount of nitrogen and phosphorus. No significant population growth or new sewer connections are expected to significantly increase average flows in the immediate future.

As stated, the Authority expects that the Borough and Township sewer replacement projects will significantly reduce system inflow and infiltration. In fact, CMA has assumed that reduction of flow will be sufficient to eliminate all CSO's without exceeding existing plant capacity. This assumption is the "lynchpin" of the Authority's Long Term Control Plan.

Failure to achieve these goals could result in a significant plant expansion along with measures to protect the NRT process during peak flow events. The results of the Borough/Township projects will not be known until after 2012. The issue of peak flow and effect on the process treatment system is an unknown variable for this study. Therefore, certain flow assumptions have been made to facilitate completion of this BNR evaluation.

3.4 Process Alternatives

3.4.1 Introduction

The most common process configuration for activated sludge NRTs is the plug flow process, where flow enters a reactor cell (zone) through one end, moves through the reactor like a plug through a channel (or a bullet through a gun barrel), and leaves through the opposite end. There are many available variations of this, depending upon the desired results. In nearly all plug flow activated sludge NRT processes, the following influent streams are introduced to the upstream end of the reactor:

1. Raw wastewater
2. Return activated sludge (RAS)
3. Internal recycle flow

The majority of the suspended solids that exit from the reactor(s) to the secondary clarifier(s) (typical of activated sludge processes) are returned to the reactors as RAS, with a fraction wasted (waste activated sludge-WAS), maintaining a relatively constant quantity of activated sludge and suspended solids in the system. Activated sludge is maintained in the reactor to consume the organics in the wastewater. The organics serve as food for the sludge, or biomass, which reproduce and grow new cells in the activated sludge process. Plug-flow processes generally produce better quality effluents than complete mix processes for a given reactor volume because they operate at higher kinetic rates. This is a result of all of the food in the raw wastewater being mixed with a relatively small amount of mixed liquor at the head of the reactor. This process prevents reaction rates from being limited by the amount of food, which is what occurs in complete mix processes.

Plug flow processes are continuous flow, activated sludge processes in which the longitudinal dispersion of the substrate is minimized to achieve faster reaction kinetics in smaller reactor volumes. Plug flow kinetics are approximated in segmented tanks having a high length-to-width ratio, such as was the basis for this analysis. Although operated in a complete mix mode, the circular tanks at the CMA WWTF can be retrofitted for plug flow conversion. Although the existing cells in the tanks are circular, retrofitting them with internal baffle walls would divide the cells (zones) into smaller subzones, allowing flow to be routed laterally back-and-forth from zone-to-zone, closely approximating plug flow kinetics.

For most NRT systems, the initial reactor is unaerated (i.e. anoxic/anaerobic zones) with the latter parts of the reactor aerated (i.e. oxic zones). In the aerated part, BOD is consumed and influent nitrogen is nitrified (i.e. NH_4-N is converted to NO_3-N and NO_2-N). The nitrified effluent, which is BOD deprived, is returned to unaerated zone of the reactor where microorganisms convert NO_3-N and NO_2-N to N_2 gas. The unaerated part is at front of the reactor because the influent wastewater BOD serves as food for the microorganisms in the unaerated zone.

The activated sludge NRT processes that rely upon plug flow kinetics were evaluated for the NRT upgrade of the CMA WWTF are as follows:

1. Modified Ludzack-Ettinger (MLE)
2. Virginia Initiative Plant (VIP)

These processes are to be evaluated in conjunction with the abovementioned plug flow-based processes. They are described in further detail in the following sections.

Additionally, a discussion on DN sand filters is provided as an overview. Denitrification (DN) filters are considered to be viable options, but were found to be unnecessary at this time (due to cost) and, therefore, not evaluated in detail as a process option. However, DN filter may be needed in the future if stricter total maximum daily loads (TMDL) limits are implemented.

3.4.2 Step-Feed

Step-feeding is simply a method of bypassing flow from the beginning of the reactor to the end of the reactor. This process occurs at an increasing rate as flows increase (i.e. bypass flow increases, flow to the head of the reactor stays constant) in a step-wise manner, thus the term step-feed. This process reduces solids washouts from the up-front unaerated process zones, helping to preserve biomass in those zones.

However, step-feeding alone does not provide adequate nutrient removal because most of the ammonia fed to the last oxic zone will not be nitrified and some of what does will not be recycled to be denitrified. It must be used in conjunction with NRTs such as MLE or VIP, and is only required during peak flows. The step-feed process is depicted within these NRT options' process flow diagrams; see Figure 3-1 and Figure 3-2.

3.4.3 Modified Ludzack-Ettinger (MLE) Process

The MLE process is an advanced activated sludge process designed to accomplish biological nitrogen removal. In the MLE process, nitrogen is removed in a two step process. In the first step, ammonia is oxidized into nitrites and then into nitrates in the oxic zone. In the second step, the nitrites and nitrates generated in the oxic zone are denitrified in the anoxic zone; however, the anoxic zone actually physically precedes the oxic zone in the reactor train. A nitrate recycle stream from the end of the (last) oxic zone pumps the nitrites and nitrates generated there to the anoxic zone (along with the RAS), as shown in Figure 3-1. The raw wastewater fed into the anoxic zone provides the carbon substrate required for the denitrification process in the form of readily biodegradable COD. In the MLE process, COD is stabilized both in the anoxic and oxic zones.

Figure 3-1: MLE Process Flow Schematic with Step Feed Option

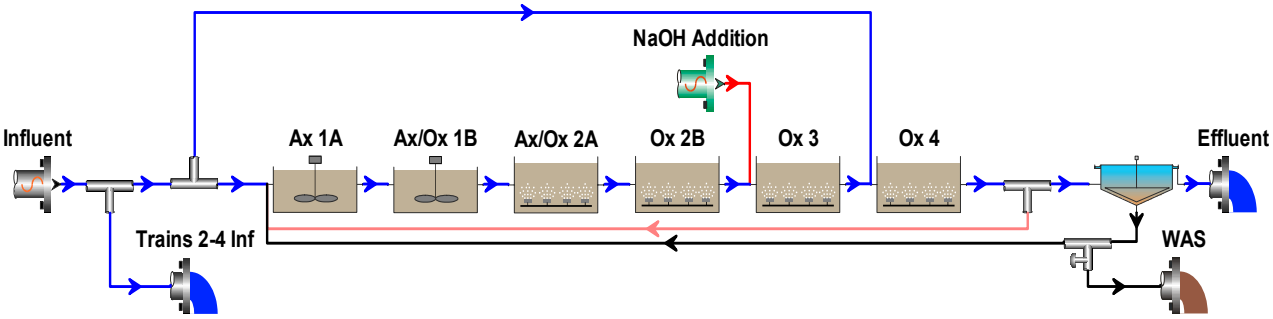

As shown in Figure 3-1, the proposed MLE process would employ the flexibility to use one or several anoxic and oxic subzones, to improve plug flow kinetics. A de-oxygenation zone would be included at the end of the oxic zone to minimize the dissolved oxygen concentration in the nitrate recycle, which reduces anoxic zone performance because the bacteria utilize oxygen preferentially over nitrate/nitrite. Dissolved oxygen in the nitrate recycle would also promote the growth of filamentous bacteria that are responsible for poor sludge settling characteristics. The de-oxygenation zone will limit dissolved oxygen in the nitrate recycle.

Preliminary modeling has shown the MLE process to be a suitable NRT upgrade option for the CMA WWTF at average flows. The MLE process, though not adequate for phosphorus removal, can be used as a suitable process since total annual phosphorus loadings are below the cap load limit. This is primarily because the actual average flow (2.8MGD) is significantly lower than the ADF (4.5 MGD), which was used to assign the NPDES cap loads.

During peak flows, the introduction of step-feeding is necessary to protect the MLE process from solids wash-out. Flows will be pumped around the reactors and discharged to secondary sedimentation tanks where chemical coagulation will enhance solids settling.

3.4.4 Virginia Initiative Plant (VIP) Process

The VIP process is an enhancement of the MLE process, with the ability to accomplish both biological nitrogen *and* phosphorus removal. Even in VIP, nitrogen will be removed by the same process as the MLE (see above). However, in the VIP process (contrary to MLE), the first part of the reactor is anaerobic (rather than anoxic), which promotes enhanced biological phosphorus removal (EBPR). The anaerobic conditions stress the micro-organisms, causing them to release phosphorus into solution as a survival mechanism. They then take back this phosphorus, (plus excess phosphorus from the mixed liquor) in the oxic zones, providing the "luxury" uptake of phosphorus.

In addition to the nitrate recycle and RAS streams, an internal recycle stream located between the anoxic and oxic zones is included with the VIP process, and is generally known as the mixed liquor recycle (MLR) stream. This stream returns denitrified mixed liquor from the second (anoxic) zone to the first (anaerobic) zone to mix and react with the raw wastewater. See Figure 3-2.

Figure 3-2: VIP Process Flow Schematic with Step Feed Option

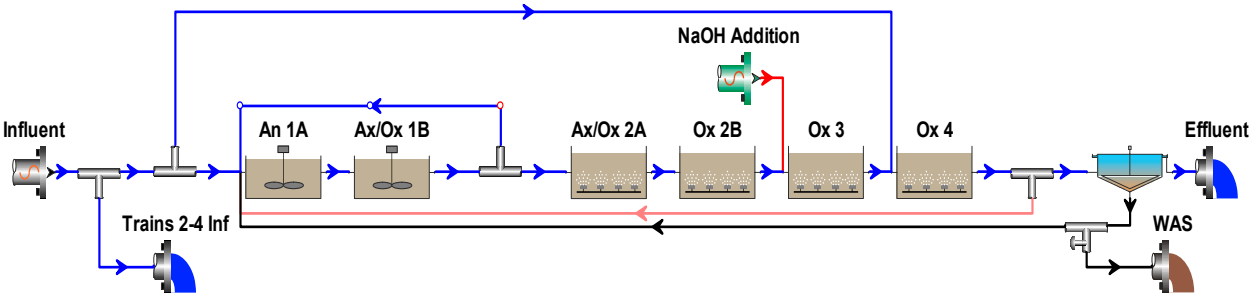

As with MLE, preliminary modeling has shown the VIP process to be a suitable NRT upgrade option at the CMA WWTF at average flows. During peak flow events, step-feeding is necessary to protect the VIP process from solids washout.

3.4.5 NRT Process Upgrade with Denitrification Sand Filters

Denitrification (DN) sand filters are a post-denitrification process that would follow the activated sludge treatment process, receiving secondary settling effluent and filtering it before disinfection. So long as the filters are large enough and sufficient carbon is fed (like Methanol), practically all of the nitrate can be removed. DN filters include conventional deep bed filters and continuously recirculating filters such as Parkson Corporation's Dynasand® filters. DN filters are cost effective when the activated sludge process fails to meet a TN limit due to excessive nitrates.

Conventional deep bed DN filters (6'-8' filter bed, 18'-20' total depth) allow denitrifying bacteria to form a biofilm and grow on the surface of the media. These filters would be added after the final settling tanks as a tertiary treatment step.

DN filters operate by distributing filter influent down through the filter and over the biofilm, which denitrifies influent nitrate to nitrogen gas. Effluent from the final settling tanks flows to the DN filter lift station and is distributed to the filter cells. After passing through the filter media, the water flows through an under-drain system and collects in the plenum before being combined with the effluent from the other filters and is sent to the effluent pump station.

As the nitrogen gas is formed and trapped within the filter media, head loss builds on the filter. Once the head loss reaches a set level, the filter will reverse flow and send nitrified effluent from the clear-well upwards through the filter to release trapped nitrogen gas. Flow spills back into the effluent channel and is redistributed to the other online filters, allowing the system to remain operational while this process occurs. Head loss may also buildup from solids depositing in the filter pore space and biomass growth. A backwash cycle using air scour and water to dislodge solids from the filter is scheduled to run about once every other day to clean the filter. Flow during the backwash cycle comes from the clear-well (opposite direction), flows up through the filter, and is collected in the mud well where it is gradually drained or pumped back to the head of the plant throughout the day.

DN filters are not cost effective when effluent nitrates are only 1 to 2 mg/L. The raw wastewater has, on average, very low influent TN concentrations, so a relatively high fraction of this nitrogen is consumed in biomass growth. This organic nitrogen is removed from the plant as waste activated sludge. Much of the remaining nitrogen is nitrified, and the activated sludge NRT process has consistently been able to denitrify nearly all of the nitrates that are produced. Therefore, DN filters were not modeled or considered in any further detail for this study.

3.5 CMA WWTF NRT Upgrade Options

The Biowin® modeling concluded that the existing process is inadequate to achieve substantial nutrient removal. To achieve consistent year round nutrient reduction, the Biowin® modeling indicates the following process modifications:

* Finer screening of raw influent wastewater to preserve downstream process pumping/mixing equipment
* Grit removal system using gravity/centrifugal force to preserve carbon source in raw sewage
* Additional reactor volume for nitrification and denitrification
* Additional clarifier volume to handle projected peak flows and prevent solids washout
* Chemical addition to enhance solids settling during peak flow periods, enhance phosphorus removal and provide additional carbon source for the NRT process

Based on the above stipulations, four possible alternatives are proposed to achieve the nutrient limit:

* Option 1: New Treatment Plant
* Option 2: New Reactor Tanks with Existing Plant Upgrade
* Option 3: Upgrade Existing Plant/Process
* Option 4: Buy Nutrient Credits Only

3.6 Option 1: New Treatment Plant

This option will examine the construction of a new wastewater treatment facility. The new WWTF will rely on the MLE/VIP process to consistently achieve BOD, TSS, nitrogen and phosphorus removal throughout the year. The main process operations will include new pretreatment building (with vortex grit removal and fine screening), reactor vessels, secondary settling tanks, UV disinfection and aerobic sludge processing/handling facility (using the existing centrifuge).

The plant will have an average flow capacity of 4.5 MGD at a peak flow of 13.5 MGD (or three times the average daily flow). As previously stated, the estimate of peak flow is preliminary and will ultimately depend on the results of the sewer replacement project.

Some elements of the existing plant are 50 years old, while the main process units are over 30 years old. From a depreciation standpoint, the existing plant components are reaching the end of their useful life, thereby giving justification for replacing all or a portion of the plant. Also, a new plant can be constructed without interrupting plant operations. Ultimately, the existing plant would be salvaged/abandoned except for some elements of the existing sludge handling system which can be retained.

The new plant will have following major process components:

a. Fine screening of raw influent wastewater to preserve process pumping/mixing equipment
b. Two (2) vortex-type grit removal systems to preserve performance of submersible mixers and retain influent carbon source
c. Influent distribution structure to step-feed peak flows around the NRT process to the settling tanks
d. Two (2) plug flow reactor vessels with anoxic and oxic zones to achieve nitrification and denitrification
e. Two (2) secondary settling tanks
f. One (1) effluent distribution structure
g. One (1) UV channel-type disinfection unit
h. Two (2) aerobic digesters
i. One (1) belt thickener
j. One (1) sludge dewatering unit (relocation of centrifuge)
k. Chemical feed system for carbon source, pH adjustment and settling enhancement

The NRT process of the system will consist of two (2) sets of reactor vessels and secondary settling tanks. Each reactor chain will consist of three (3) anoxic zones, one (1) anoxic/oxic zone and three (3) oxic zones. The system will employ two (2) clarifiers each for one chain. Due to larger capacity and detention time, the new plant will handle projected peak flows of 13.5 MGD or three times the average daily flow of 4.5 MGD.

The Biowin® schematic model of this NRT option is shown in Figure 3-3 showing two parallel treatment process. Several proposed site plans for this option are shown in Figure 3-4 and Figure 3-5. Please refer to Appendix A for detailed Biowin® modeling results. A summary of projected nutrient loadings are in Table 3-2.

Figure 3-3: Biowin Schematic Model of Option 1 and of Option 2

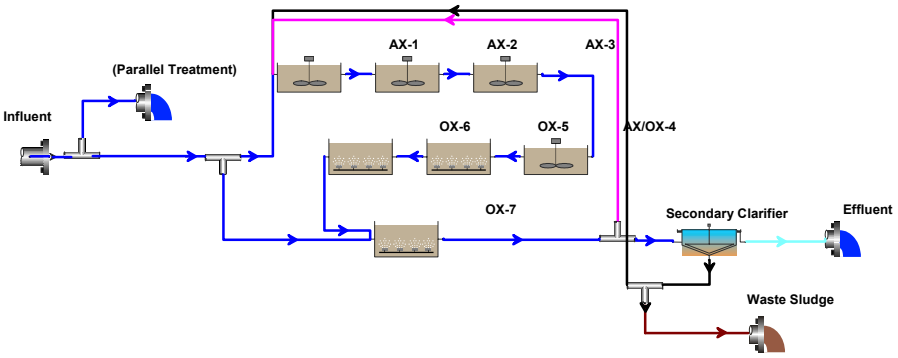

Table 3-2: Summary of Projected Effluent N and P Achieved by Option 1

		Projected Effluent (lbs/yr)	NPDES Limit (lbs/yr)	%
Option 1	TP	10,602	10,959	-3.26
	TN	68,792	82,191	-16.30

1. TN Loadings for Option 1 are calculated assuming that in the absence of primary clarifier in Option 1 10% more TN will be removed due to more BOD availability.
2. TP loading will remain approximately at the same level as TP can be controlled by using polymer.

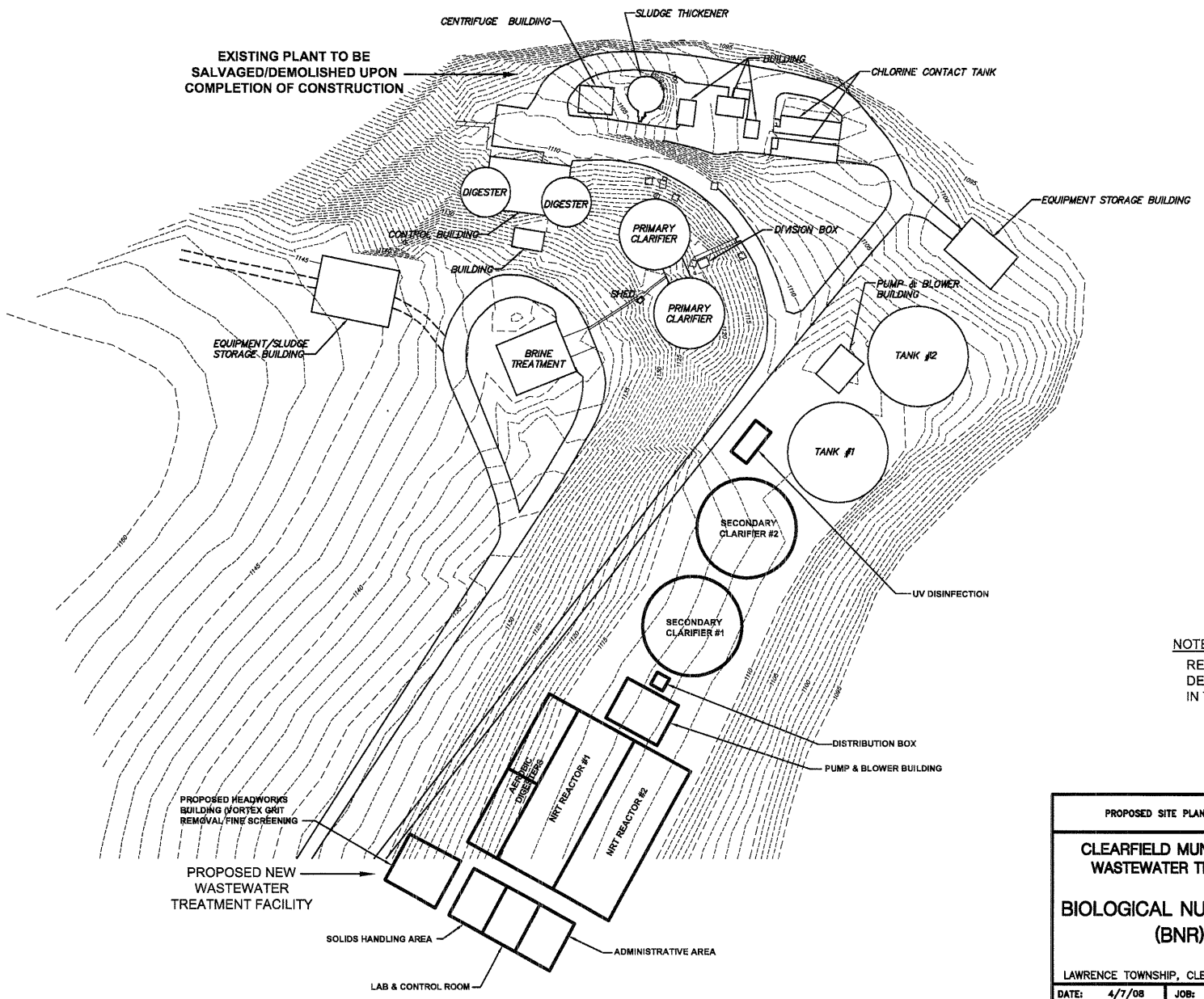

NOTE:

REUSE OF THE EXISTING CENTRIFUGE DEWATERING SYSTEM WILL BE UTILIZED IN THE NEW PLANT.

PROPOSED SITE PLAN LAYOUT "A" FOR OPTION 1

CLEARFIELD MUNICIPAL AUTHORITY
WASTEWATER TREATMENT FACILITY

BIOLOGICAL NUTRIENT REMOVAL (BNR) STUDY

LAWRENCE TOWNSHIP, CLEARFIELD COUNTY, PENNSYLVANIA

DATE:	4/7/08	JOB:	90016	SCALE:	NONE
FILE:	FIGURE_3-4	DRAWN BY:	AJL	CHECKED BY:	MVG

GD&F
GWIN DOBSON & FOREMAN INC.
Consulting Engineers
3121 Fairway Drive
Altoona, PA 16602

SHEET NO:
FIGURE 3-4

G:\90016\CMA Biological removal (BNR) Study\FIGURE_3-4.dwg

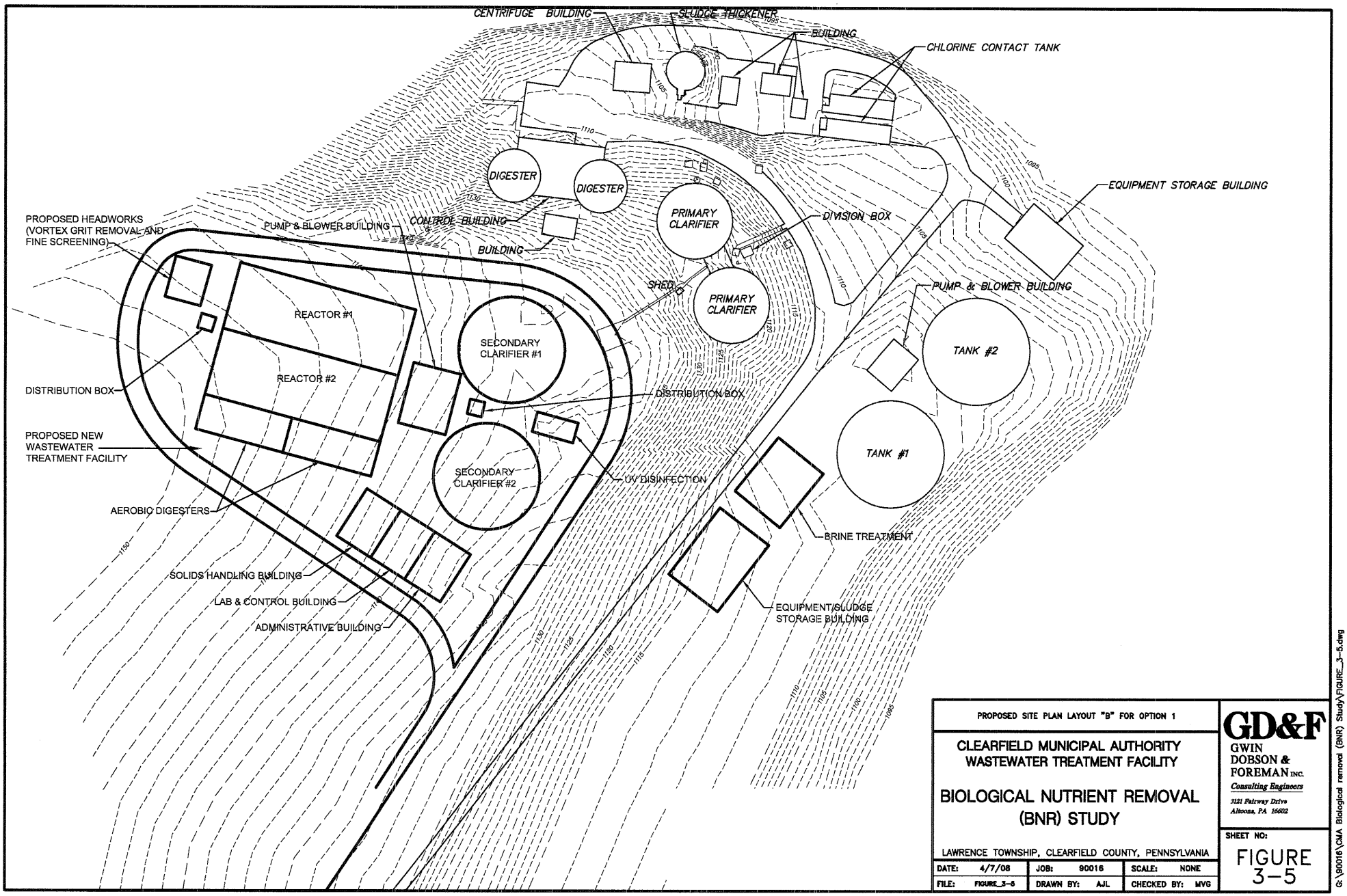

PROPOSED SITE PLAN LAYOUT "B" FOR OPTION 1

CLEARFIELD MUNICIPAL AUTHORITY
WASTEWATER TREATMENT FACILITY

BIOLOGICAL NUTRIENT REMOVAL (BNR) STUDY

LAWRENCE TOWNSHIP, CLEARFIELD COUNTY, PENNSYLVANIA

DATE:	4/7/08	JOB:	90016	SCALE:	NONE
FILE:	FIGURE_3-5	DRAWN BY:	AJL	CHECKED BY:	MVG

GD&F
GWIN DOBSON & FOREMAN INC.
Consulting Engineers
3121 Fairway Drive
Altoona, PA 16602

SHEET NO:
FIGURE 3-5

G:\90016\CMA Biological removal (BNR) Study\FIGURE_3-5.dwg

A detailed discussion of each process component is as follows:

Headworks

A new off-site headworks facility would be constructed utilizing fine screening and vortex grit removal. The facility would be designed to adequately process a peak raw influent flow of 13.5 MGD. New raw sewage pumps rated for peak flow capacity shall also be provided.

Reactor Influent Distribution Box

A new flow distribution box would be constructed to distribute the raw influent flow to the two (2) new NRT reactors. The structure would be designed to adequately distribute a peak raw influent flow of 13.5 MGD, of which up to 9.0 MGD would be equally distributed to the head of the reactors and 4.5 MGD would be equally distributed to the last zone of the reactors as part of the peak flow bypass/step-feed process.

Two BNR (MLE) Reactors

Two new, concrete MLE reactor tanks would be constructed, each having a 20-foot side water depth (SWD). The reactors would be constructed side-by-side within a concrete basin constructed of 22-foot deep (with 2-foot of freeboard) exterior concrete walls. The common interior wall separating the reactors will also be 22-feet deep. Each reactor would be comprised of the following components (note - volumes are one-half total).

1) Dedicated Anoxic (Unaerated) Zones (Pass #1) - The first three reactor zones (Zones #1, #2, & #3) would each have a capacity of 150,000 gallons (gal) and would be dedicated anoxic zones in which the raw influent wastewater would be denitrified. A new submersible mixer (to achieve complete mixing, see below for further details) would be installed in each zone.

2) Anoxic/Oxic (Unaerated/Aerated) Switch Zone - A new submersible mixer and new air diffusers (elastomer membrane type) would be installed in Zone #4, a "switch" zone (150,000 gal) that can be operated under anoxic (unaerated, using a submersible mixer) or oxic (aerated, using air diffusers) conditions.

3) Dedicated Oxic (Aerated) Zones - In each of the following zones, new aeration equipment (headers and elastomer membrane diffusers) would be installed to maintain aerated (oxic) conditions to achieve nitrification.

    a. Zone #5 (Pass #2) would be 150,000 gal.
    b. Zone #6 (Pass #2/#3) would be comprised of two conjoined, rectangular sections, the first being for a total capacity of 240,000 gal.
    c. Zone #7 (Pass #3) would be 380,000 gal.

4) Flow Control - The following improvements are required for proper flow control in the reactors and would improve performance.

   a. Step-Feed (Peak Flow Bypass) - Because the system would have great difficulty in avoiding solids washouts at peak flows, it requires step-feeding in order to bypass the additional amount of flow to the last oxic zone. This zone would treat the dilute wastewater in a "contact-stabilization" mode. To achieve this requirement, new piping would be utilized to route the step-feed flow.

   b. Internal Divider Walls - Two (2) internal divider walls, each 22-foot in height, would be constructed to separate each of the three passes. A few feet of clearance at one end would be built-in for flow to communicate from one pass to the next.

   c. Internal Baffle Walls - Five (5) submerged, internal baffle walls would be constructed, separating both Zones #1 and #2. Each wall would be full-width across the pass and slightly submerged beneath the water surface.

   d. Underflow Ports - One underflow port would be installed in each internal baffle wall to conduct flow in a meandering pattern. To achieve this, the ports would be installed in an alternating pattern.

   e. Internal (Nitrate) Recycle - Two (2) new 2,400 gallons-per-minute (gpm) pumps and associated piping would be installed to return the nitrified mixed liquor to the first (anoxic) zone of the reactor.

5) Mixing & Aeration

   a. Submersible Mixers - To achieve complete mixing under unaerated conditions, a new 9,000 gpm submersible mixer would be installed in each Zone: #1, #2, #3, & #4.

   b. Aeration System - To achieve full nitrification under aerated conditions and complete mixing, one new aeration system would be installed, including:

i. Air Supply Centrifugal Blowers - Four (4) new 2,700 ICFM (at 10 psi) centrifugal blowers would be installed. Three (3) blowers would normally operate while the fourth would act as a backup blower.

ii. Air Supply and Distribution Piping - New air supply and distribution piping would be installed to direct and distribute air from the centrifugal blowers to the diffusers in Zones #4, #5, #6, & #7.

iii. Elastomer Membrane Fine Bubble Air Diffusers - New elastomer membrane fine bubble air diffusers would be installed in Zones #4, #5, #6, & #7.

Clarifier Influent Distribution Box

One clarifier influent distribution box would be constructed to collect/combine the reactors' effluent and to distribute flow to the two new secondary clarifiers.

Two Secondary Clarifiers

Two (2) new secondary clarifiers will be provided with a 100-foot minimum diameter and 12-foot depth each. At this size, the total detention time at 13.5 MGD is 2.5 hours and the surface overflow rate would be 850 GPD/SF. The size of the clarifiers will be finalized in final design. Each clarifier will be equipped with a sludge collector mechanism, influent well, underslab influent and RAS piping, inboard effluent launders (with sloped density current baffles) and scum collector.

For an average daily flow of 4.5 MGD, the surface overflow rate is 340 GPD/SF and 7.8 hours which may exceed recommended criteria. During periods of low flow, one (1) clarifier could be utilized to increase the surface overflow rate and be reactivated during peak flow events.

Ultraviolet (UV) Disinfection

A channel-type ultraviolet system, sized for the peak flow rate of 13.5 MGD, will eliminate the need for chlorination and related safety and stream toxicity considerations.

Chemical Feed Systems

1) Caustic Soda - Caustic soda is necessary during wet weather flows to keep pH above 6.0. A bulk storage tank, metering pump, and associated piping would need to be installed.

2) Methanol - Methanol is necessary to trim effluent nutrient levels during periods of heavy pollutant loadings and/or during wet weather flows. A bulk storage tank, metering pump, and associated piping would need to be installed.

3) Alum, Polymer and/or Other Coagulant Aids - Coagulant aids are necessary to trim effluent suspended solids levels during wet weather flows. This would also aid in lowering effluent total phosphorus (TP) levels as well.

Solids Handling

1) Three (3) new return activated sludge pumps are required to return nitrate mixed liquor and are rated at 1,200 gpm.

2) Two (2) new waste activated sludge pumps rated for 30 gpm.

3) Sludge Thickener - A new 0.75-meter gravity belt thickener (GBT) would be installed to thicken waste activated sludge (WAS) prior to digestion.

4) Aerobic Digesters - Two (2) new, rectangular aerobic digesters would be constructed to reduce the volume of solids that require disposal. The digesters would adjoin the new reactors and would each be 79'-6" l x 30'-0" w x 20' SWD (356,800 gal). The walls of the digesters would be 22-foot in height, constructed of concrete. Additionally, two new 2,500 ICFM (at 10 psi) centrifugal blowers with associated piping and coarse bubble diffusers would be installed to provide air to the digesters. The digesters will provide a 20-day hydraulic detention time (HDT) at normal influent flows.

5) Centrifuge - The existing centrifuge would be relocated to the new plant to dewater the aerobically digested, waste activated sludge.

Control and Mechanical Buildings

The new facility will require control and mechanical buildings to house administrative, laboratory and control functions along with solids handling, pumping, aeration blowers, chemical feed/storage systems and UV equipment

Plant Control System

The proposed upgrades to the wastewater treatment facility will vastly increase the operating complexity of the facility. A significant number of process control points and sequences have to be incorporated in an NRT control system. A supervisory control and data acquisition system (SCADA) should be installed to control plant operations, monitor process parameters and generate data and reports.

Programmable Logic Controllers (PLC's) have become the standard for SCADA systems. These systems are not only used in municipal applications, but also for the automation of industrial applications. PLC systems are available from a number of the lead providers of electrical equipment. Due to the wide availability of systems, the PLC's are a cost effective and reliable operating platform for the monitoring and control system.

3.7 Option 2: New Reactor Tanks with Existing Plant Upgrade

Option 2 also utilizes the MLE/VIP process but maximizes use of the existing facility will be made to use the existing facility to the maximum. New facilities include two (2) new reactor vessels, two (2) new circular clarifiers, new headworks/pretreatment building (with fine screening and vortex grit removal) and new UV disinfection unit as follows.

a. Fine screening of raw influent wastewater to preserve process pumping/mixing equipment
b. Two (2) vortex-type grit removal systems to preserve performance of submersible mixers and retain influent carbon source
c. Influent distribution structure to step-feed peak flows around the NRT process to the settling tanks
d. Two (2) plug flow reactor vessels with anoxic and oxic zones to achieve nitrification and denitrification
e. Conversion of two (2) existing reactor-clarifiers to full clarification tanks
f. One (1) UV channel-type disinfection unit
g. Reuse of anaerobic digesters and centrifuge; conversion of existing thickener to a primary sludge fermenter
h. Chemical feed system for carbon source, pH adjustment and settling enhancement

The flow schematic and tank sizes will remain same as Option 1. Please refer to Figure 3-3 and Table 3-2, respectively. The proposed site plan layout for the Option 2 is shown in Figure 3-6. Please refer to the Appendix for detailed Biowin® modeling results and Table 3-3 for projected nutrient loadings.

Table 3-3: Summary of Projected Effluent N and P Achieved by Option 2

		Projected Effluent (lbs/yr)	NPDES Limit (lbs/yr)	%
Option 2	TP	10,602	10,959	-3.26
	TN	76,435	82,191	-7.00

1. TP loading will remain approximately at the same level as TP can be controlled by using polymer.

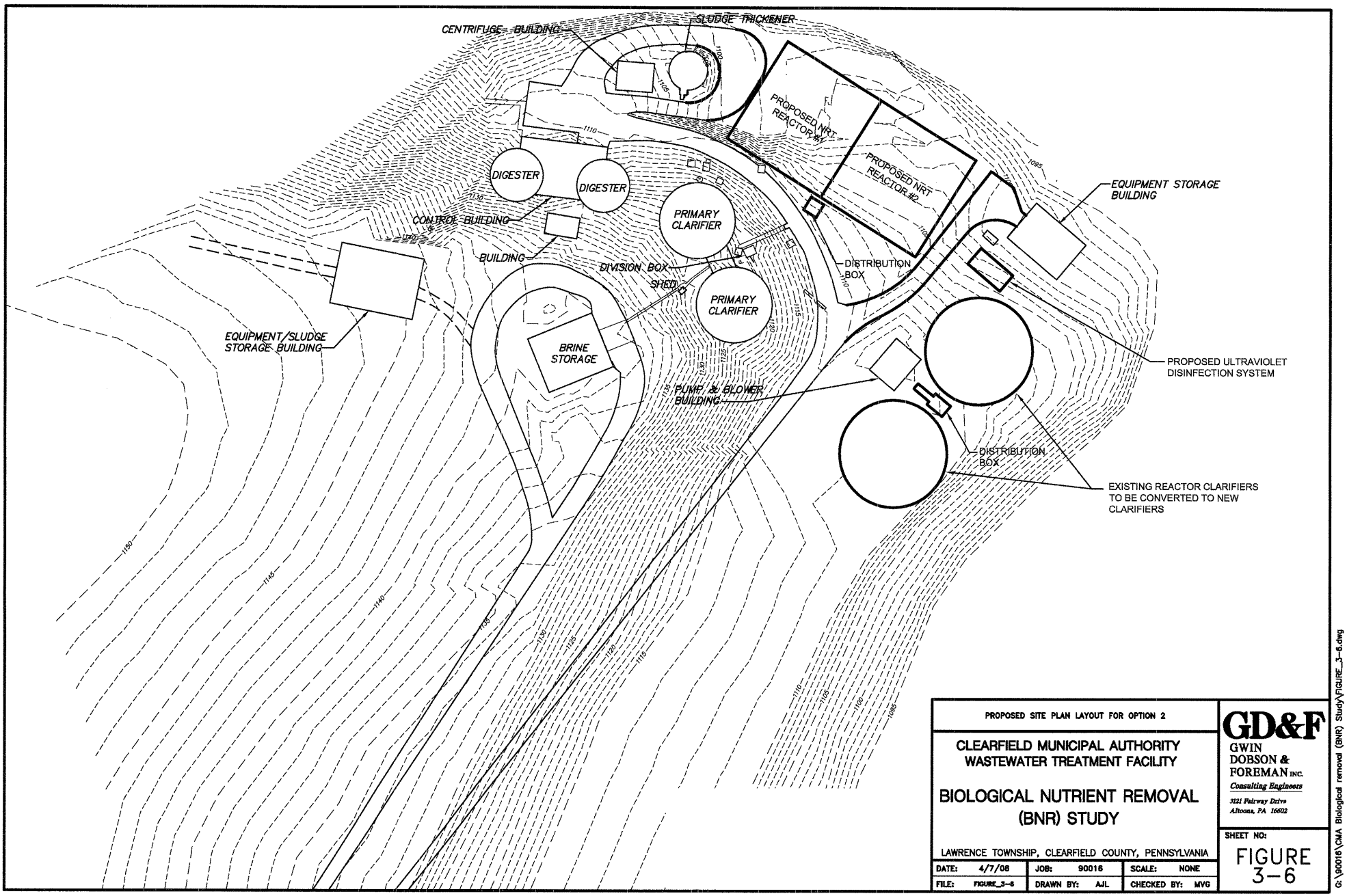

PROPOSED SITE PLAN LAYOUT FOR OPTION 2

CLEARFIELD MUNICIPAL AUTHORITY
WASTEWATER TREATMENT FACILITY

BIOLOGICAL NUTRIENT REMOVAL
(BNR) STUDY

LAWRENCE TOWNSHIP, CLEARFIELD COUNTY, PENNSYLVANIA

DATE:	4/7/08	JOB:	90016	SCALE:	NONE
FILE:	FIGURE_3-6	DRAWN BY:	AJL	CHECKED BY:	MVG

GD&F
GWIN DOBSON & FOREMAN INC.
Consulting Engineers
3121 Fairway Drive
Altoona, PA 16602

SHEET NO:
FIGURE 3-6

G:\90016\CMA Biological removal (BNR) Study\FIGURE_3-6.dwg

New Headworks

A new off-site headworks facility would be constructed utilizing fine screening and vortex grit removal. The facility would be designed to adequately process a peak raw influent flow of 13.5 MGD. New raw sewage pumps rated for peak flow capacity shall also be provided.

Primary Effluent Piping Relocation

The existing 24-inch primary effluent piping from existing Manhole No. 3 to the secondary process distribution box will be abandoned-in-place. The new outfall pipe will run from Manhole No. 3 to the new reactor influent distribution box, and then to the new reactors.

New Reactor Influent Distribution Box

A new flow distribution box would be constructed or installed to distribute the primary effluent flow to the two new reactors. The structure would be designed to adequately distribute a peak primary effluent flow of 13.5 MGD, of which, up to 9.0 MGD would be equally distributed to the head of the reactors and 4.5 MGD would be equally distributed to the last zone of the reactors as part of the peak flow bypass/step-feed process.

Two New BNR (MLE) Reactors

Two new, concrete MLE reactors would be constructed, each having a 20-foot side water depth (SWD). The reactors would be constructed side-by-side within a concrete basin constructed of 22-foot deep exterior concrete walls (with 2-foot freeboard). The common interior wall separating the reactors will also be 22-feet deep. Each reactor would be comprised of the following components (note - volumes are one-half the total).

1) Dedicated Anoxic (Unaerated) Zones (Pass #1) - The first three reactor zones (Zones #1, #2, & #3) would each have a capacity of 160,000 gallons and would be dedicated anoxic zones in which the primary effluent wastewater would be denitrified. Two internal baffle walls (see below) would separate the zones and a new submersible mixer (to achieve complete mixing) would be installed in each zone.

2) Anoxic/Oxic (Unaerated/Aerated) Switch Zone - A new submersible mixer and new air diffusers (elastomer membrane type) would be installed in Zone #4, a "switch" zone (160,000 gal) that can be operated under anoxic (unaerated, using a submersible mixer) or oxic (aerated, using air diffusers) conditions.

3) Dedicated Oxic (Aerated) Zones - In each of the following zones, new aeration equipment (headers and elastomer membrane diffusers) would be installed to maintain aerated (oxic) conditions to achieve nitrification.

a. Zone #5 (Pass #2) would be 160,000 gal.

b. Zone #6 (Pass #2/#3) would be comprised of two conjoined, rectangular sections, the first being for a total capacity of 250,000 gal.

c. Zone #7 (Pass #3) would be 380,000 gal.

4) Flow Control - The following improvements are required for proper flow control in the reactors and would improve performance.

a. Step-Feed (Peak Flow Bypass) - Because the system would have great difficulty in avoiding solids washouts at peak flows, they require step-feeding in order to bypass the additional amount of flow to the last oxic zone. This zone would treat the dilute wastewater in a contact-stabilization mode. To achieve this requirement, new piping would be utilized to route the step-feed flow.

b. Internal Divider Walls - Two internal divider walls, each 22-foot in height, would be constructed to separate each of the three passes. A few feet of clearance at one end would be built in for flow to communicate from one pass to the next.

c. Internal Baffle Walls - Five submerged, internal baffle walls would be constructed, separating each zone. Each wall would be full-width across the pass and slightly submerged beneath the water surface.

d. Underflow Ports - One underflow port would be installed in each internal baffle wall to conduct flow in a meandering pattern. To achieve this, the ports would be installed in an alternating pattern.

e. Internal (Nitrate) Recycle - Two new 2,400 gpm pumps and associated piping would be installed inside the existing pump and blower building to return the nitrified mixed liquor to the first (anoxic) zone of the reactor.

6) Mixing & Aeration

a. New Submersible Mixers - To achieve complete mixing under unaerated conditions, one new 9,000 gpm submersible mixer would be installed in each Zone: #1, #2, #3, & #4.

b. New Aeration System - To achieve full nitrification under aerated conditions and complete mixing, one new aeration system would be installed, including:

i. Air Supply Centrifugal Blowers - Four (4) new 2,700 ICFM (at 10 psi) centrifugal blowers would be installed in the existing pump and blower building. The existing aeration blowers are not adequate due to the increased operating pressures of the new fine bubble diffusers. Three (3) blowers would normally operate, while the fourth would act as a backup.

ii. Air Supply and Distribution Piping - New air supply and distribution piping would be installed to direct and distribute air from the centrifugal blowers to the new diffusers (see below) in the oxic (aerated) zones (Zones #4, #5, #6, & #7).

iii. Elastomer Membrane Fine Bubble Air Diffusers - New elastomer membrane fine bubble air diffusers would be installed in Zones #4, #5, #6, & #7.

Retrofit Existing Clarifier Influent Distribution Box

The existing clarifier influent distribution box will be modified to collect/combine reactor effluent and to distribute the flow to the two converted secondary clarifiers. At a peak flow of 13.5 MGD, the combined surface overflow rate is 1,000 GPD/SF and the detention time is 2.6 hours, which are acceptable.

For an average daily flow of 4.5 MGD, the surface overflow rate is 340 GPD/SF and a detention time of 7.8 hours which may exceed recommended criteria. During periods of low flow, one (1) clarifier could be utilized to increase the surface overflow rate (and decrease the detention time to prevent bacteriological formation) and then reactivated during peak flow events.

Convert Existing Reactor Clarifier Tanks to Clarifiers

The existing reactor-clarifier tanks would be converted to full-on, secondary clarifiers each 92-feet in diameter, for a combined, total surface area of 13,300 ft^2. The necessary renovations are as follows:

1) Remove the existing divider wall between the clarifiers and aeration tanks.
2) Remove the false floors, deepen the clarifiers from 8-foot to 14.7-feet (side water depth), and install a new concrete bottom slab.
3) Replace the existing clarifier mechanisms with new clarifier mechanisms consisting of sludge collector, scum collector; influent well and access bridge.
4) Install new effluent launders on the outside wall of the tank using sloped density current baffles.

New Ultraviolet (UV) Disinfection

A channel-type ultraviolet system, sized for the peak flow rate of 13.5 MGD, will eliminate the need for chlorination and related safety and stream toxicity considerations.

New Chemical Feed Systems

1) Caustic Soda- Caustic soda is necessary during wet weather flows to keep pH between 6.0 and 9.0. A bulk storage tank, metering pump, and associated piping would need to be installed.

2) Methanol - Methanol is necessary to trim effluent nutrient levels during periods of heavy pollutant loadings and/or during wet weather flows. A bulk storage tank, metering pump, and associated piping would need to be installed.

3) Alum, Polymer and/or Other Coagulant Aids - Coagulant aids are necessary to trim effluent suspended solids levels during wet weather flows. This would aid in lowering effluent total phosphorus (TP) levels as well.

Solids Handling

This option will utilize the nearly renovated anaerobic digestion system and dewatering facility. The sludge handling system was upgraded in the last five years and is functioning in an efficient manner, producing stabilized sludge of exceptional quality.

Convert Existing Sludge Thickener to Primary Sludge Fermenter

This task will entail replacing the existing mechanism with modified equipment for primary sludge fermentation. This process will generate additional carbon for the NRT process. A fiberglass cover may be needed for odor control.

Plant Control System

The proposed upgrades to the wastewater treatment facility will vastly increase the operating complexity of the facility. A significant number of process control points and sequences have to be incorporated in an NRT control system. A supervisory control and data acquisition system (SCADA) should be installed to control plant operations, monitor process parameters and generate data and reports.

Programmable Logic Controllers (PLC's) have become the standard for SCADA systems. These systems are not only used in municipal applications, but also for the automation of industrial applications. PLC systems are available from a number of the lead providers of electrical equipment. Due to the wide availability of the systems, the PLC's are a cost effective and reliable operating platform for a monitoring and control system.

Upgrade of Existing Control and Mechanical Buildings

The new facility will require upgrade of control and mechanical buildings to house laboratory and control functions along with solids handling, pumping, aeration blowers, chemical feed/storage systems and UV equipment.

3.8 Option 3: Upgrade Existing Plant/Process

The following option describes improvements and modifications to the existing system to achieve the best possible nutrient removal using the MLE process. This option provides the maximum nutrient removal within the capacity of the existing tankage. Obviously, the amount of nutrient removal is less than Options 1 and 2 since those alternatives have much greater hydraulic capacity.

Option 3 primarily includes installing a 320,000 gallons anoxic tank and dividing the existing aeration tank into two aerated sub-zones. The plant will rely on the existing primary settling tanks and coversion of the reactor-clarifiers to an MLE process to achieve nominal nutrient removal at average daily flow.

Retrofitting the existing plant will bring the TN and TP under the NPDES limit of 6 mg/L and 0.8 mg/L at the current average daily flow of 2.8 MGD. However, during higher flows, performance will decrease as the flow increases resulting in higher nutrient loadings during these events. It is hoped that the average annual loading will be under the NPDES load limits when combined with loadings treated during average daily flow periods.

This option is considered an interim solution since future peak flows are unknown. It is unlikely that future peak flows will be within existing plant capacity after all upstream sewer work is completed and all CSO's are closed. Also, reuse of converted facilities may not be feasible in a future plant upgrade. The process modifications and additions are described as follows:

a. A new distribution structure, with flow regulating weirs, after the primary settling tanks. This structure will control the flow entering the anoxic zone by step-feeding high flows to last aeration zone and then onto the clarifiers.
b. A new anoxic tank of 320,000 gallons capacity. This zone will accomplish denitrification of the nitrified return flow from the oxic zones.
c. Installation of submersible mixers in the anoxic zone for the complete mixing of mixed liquor.
d. Installation of baffle walls in existing aeration tanks to divide the volume into halves to achieve plug flow mechanics.
e. Installation of fine bubble air diffusers for better aeration and mixing of the oxic zone.
f. Higher pumping and piping capacity is required because MLE process requires higher flows to be recycled back to the anoxic zone.
g. Chemical precipitation, pH adjustment and settling enhancement will require methanol, caustic soda, alum and polymer chemical feed systems.

Primary Effluent Piping Relocation

The existing 24-inch primary effluent piping from existing Manhole No. 3 to the secondary process distribution box will be abandoned-in-place. The new outfall pipe will run from Manhole No. 3 to the new reactor influent distribution box, and then to the new reactors.

New Reactor Influent Distribution Box

A new flow distribution box will be constructed to distribute the primary effluent flow to the two converted reactors. The structure would be designed to adequately distribute a peak primary effluent flow of 6.3 MGD, of which, up to 5.0 MGD would be equally distributed to the new anoxic tank (see below) and 1.3 MGD would be equally distributed to the last zone of the reactors as part of the peak flow bypass/step-feed process.

New Anoxic Tank

A new 320,000 gal (approx.) tank will be constructed and serve as the first anoxic zone for each reactor. The tank would use a 16,000 gpm vertical-mounted submersible mixer to maintain completely mixed, anoxic (unaerated) conditions.

Conversion of Existing Reactors to BNR Reactors

The two existing reactors (14.7' SWD) will need to be upgraded and converted to operate more effectively within the proposed BNR (MLE) process. The conversion procedure encompasses the following modifications for each existing reactor (note - volumes are one-half total).

1) New Dedicated Oxic (Aerated) Zones - Two new, oxic reactor zones would be created in each existing aeration tank through the installation of baffle walls and will have the following approximate capacities.

   a. Zone #1 - 300,000 gal
   b. Zone #2 - 100,000 gal

2) Flow Control - The following improvements are required for proper flow control in the reactors and would improve performance.

   a. Step-Feed (Peak Flow Bypass) - Because the system would have great difficulty in avoiding solids washouts at peak flows, step-feeding is required in order to bypass the excess amount of flow to the last oxic zone. This zone would treat the dilute wastewater in a contact-stabilization mode. To achieve this requirement, new piping would be utilized to route the step-feed flow from the reactor influent distribution box to the last zone in each reactor.

   b. Internal Baffle Wall - One submerged, internal baffle wall would be constructed inside the existing aeration tank, creating Zones #1 and #2. The wall would be full-width across the reactor and slightly submerged beneath the water surface.

c. Underflow Ports - One underflow port would be installed in the internal baffle wall to conduct flow from the end of Zone #1 to the head of Zone #2.

d. Internal (Nitrate) Recycle - One new 1,200 gpm submersible pump (and associated piping) would be installed inside Zone #2 (near the effluent end) to return the nitrified mixed liquor to the anoxic tank.

2) New Aeration System - To achieve full nitrification under aerated conditions and complete mixing, one new aeration system would be installed, including:

a. Air Supply Centrifugal Blowers - Four (4) new 2,000 ICFM (at 10 psi) centrifugal blowers would be installed in the existing pump and blower building. The existing aeration blowers are not adequate due to the increased operating pressures of the new fine bubble diffusers. Three (3) blowers would normally operate while the fourth would act as a backup blower.

b. Air Supply and Distribution Piping - New air supply and distribution piping would be installed to direct and distribute air from the centrifugal blowers to the new diffusers (see below) in the upgraded aeration tanks (reactors).

c. Elastomer Membrane Fine Bubble Air Diffusers - New elastomer membrane fine bubble air diffusers would be installed in the converted aeration tanks (reactors).

New Chemical Feed Systems

1) Caustic Soda - Caustic soda is necessary during wet weather flows to keep pH above 6.0. A bulk storage tank, metering pump, and associated piping would need to be installed.

2) Methanol - Methanol is necessary to trim effluent nutrient levels during periods of heavy pollutant loadings and/or during wet weather flows. A bulk storage tank, metering pump, and associated piping are required.

3) Alum, Polymer and/or Other Coagulant Aids - Coagulant aids are necessary to trim effluent suspended solids levels during wet weather flows. This would also aid in lowering effluent total phosphorus (TP) levels as well.

A summary of the Biowin® modeling results yielded the following nutrient loadings at current average daily flow and peak flow conditions is shown in Table 3-3 below:

Table 3-4: Summary of Projected Effluent N and P Achieved by Option 3

	Projected Effluent, (lbs/yr)	NPDES Limit, (lbs/yr)	Exceedence %
TP	9,200	10,959	-16
TN	90,000	82,191	10

The Biowin® process schematic of Option 3 is shown in Figure 3-7 with a diagrammatic schematic representation is shown in Figure 3-8. The site plan layout of the Option 3 is shown in Figure 3-9.

Figure 3-7: Biowin Schematic Model of Option 3

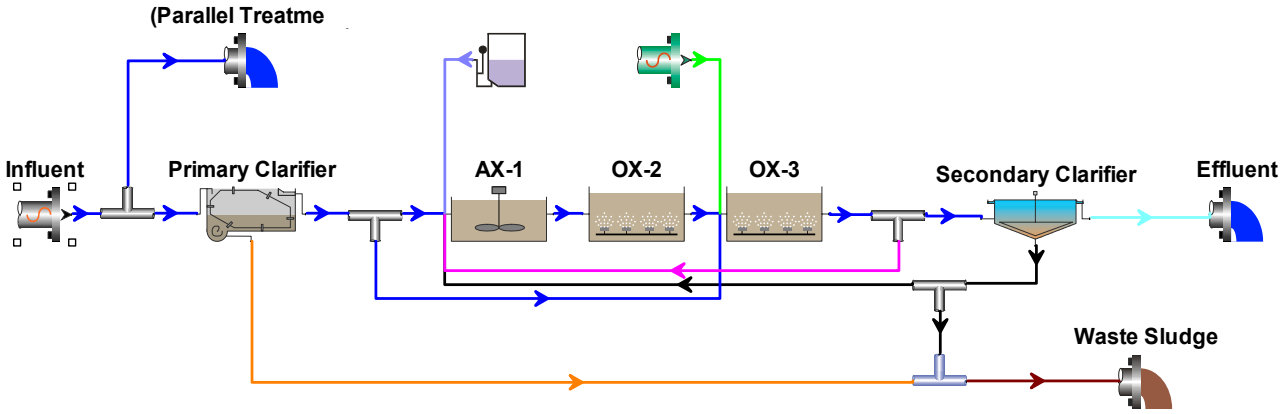

The detailed Biowin® modeling results obtained from the simulations performed on the yearly hydraulic loading data are shown in Appendix B.

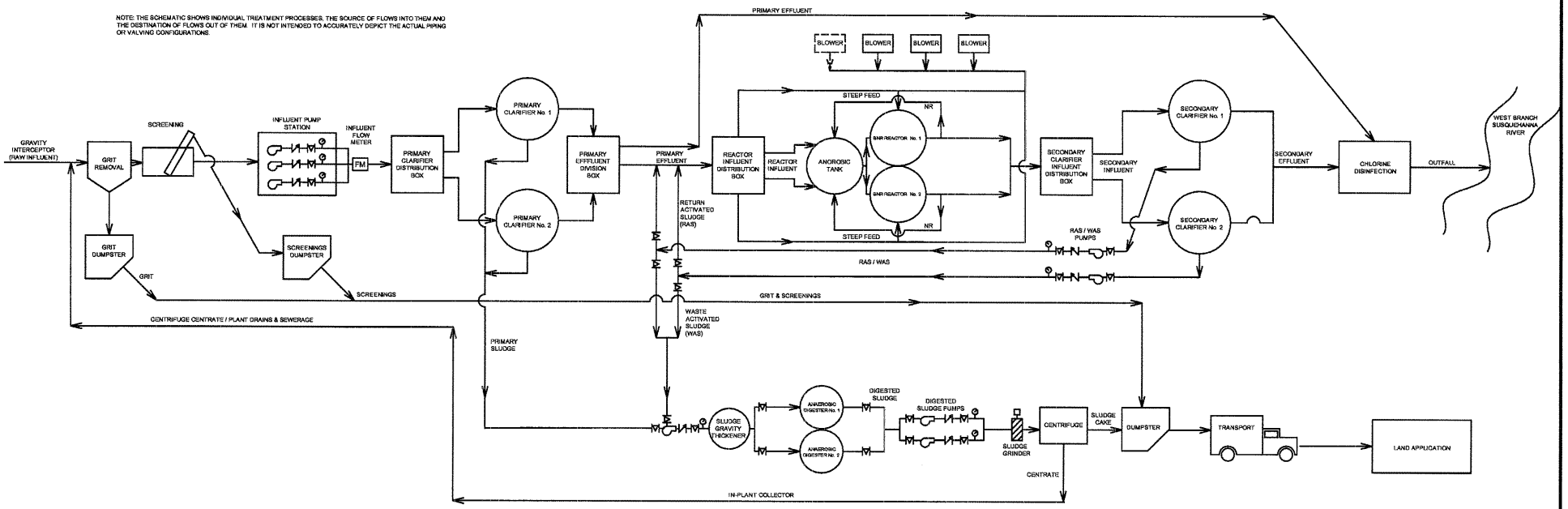

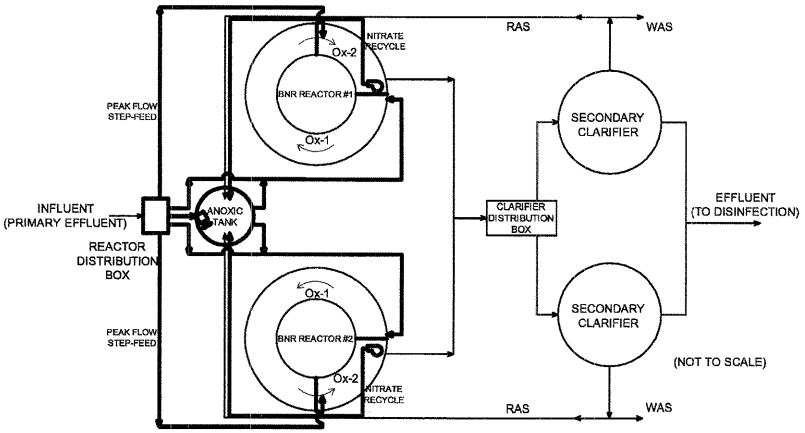

DETAILED REACTOR FLOW SCHEMATIC

(NOT TO SCALE)

Ox - Oxic/Aerobic
- Submersible Mixer
- Pump

LEGEND

NEW CONSTRUCTION

CONVERT / UPGRADE EXISTING

EXISTING

FLOW SCHEMATIC - OPTION #3 (CONVERT AERATION TANKS TO BNR REACTORS & INSTALL NEW ANOXIC TANK)

PROPOSED SCHEMATIC OF OPTION 3

CLEARFIELD MUNICIPAL AUTHORITY
WASTEWATER TREATMENT FACILITY

BIOLOGICAL NUTRIENT REMOVAL (BNR) STUDY

LAWRENCE TOWNSHIP, CLEARFIELD COUNTY, PENNSYLVANIA

DATE: 4/7/08	JOB: 90016	SCALE: NONE
FILE: FIGURE_3-8	DRAWN BY: AJL	CHECKED BY: MVG

GD&F
GWIN DOBSON & FOREMAN INC.
Consulting Engineers
3121 Fairway Drive
Altoona, PA 16602

SHEET NO:
FIGURE 3-8

G:\90016\CMA Biological removal (BNR) Study\FIGURE_2-3.dwg

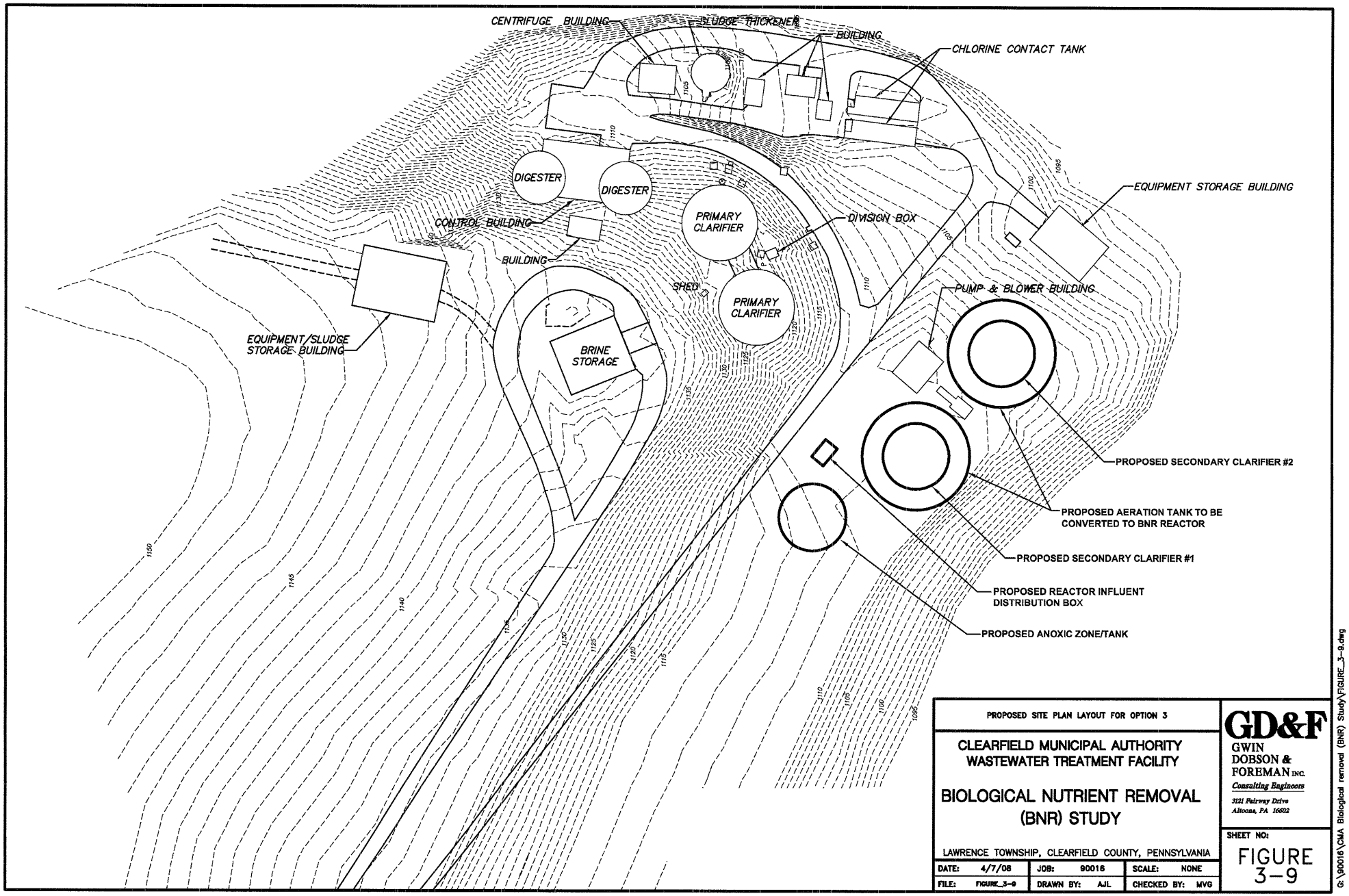

PROPOSED SITE PLAN LAYOUT FOR OPTION 3

CLEARFIELD MUNICIPAL AUTHORITY
WASTEWATER TREATMENT FACILITY

BIOLOGICAL NUTRIENT REMOVAL (BNR) STUDY

LAWRENCE TOWNSHIP, CLEARFIELD COUNTY, PENNSYLVANIA

DATE:	4/7/08	JOB:	90016	SCALE:	NONE
FILE:	FIGURE_3-9	DRAWN BY:	AJL	CHECKED BY:	MVG

GD&F
GWIN DOBSON & FOREMAN INC.
Consulting Engineers
3121 Fairway Drive
Altoona, PA 16602

SHEET NO:
FIGURE 3-9

G:\90016\CMA Biological removal (BNR) Study\FIGURE_3-9.dwg

3.9 Option 4: Buy Nutrient Credits Only

A possible option is to defer any modification project and buy credits from the PADEP Nutrient Trading Program of PADEP. A summary of estimate credit purchases for 2007 is shown for illustrative purposes below.

Table 3-5: Nutrient Credit Analysis

	Influent (lbs/yr)	Effluent (lbs/yr)	NPDES Limit (lbs/yr)	Exceedence (lbs/yr)	Credits	Credits @ $5/lb	Credits @ $9/lb
TP	19,231	7,336	10,959	-3,623	Sell	$18,115	$32,600
TN	186,445	134,244	82,191	52,053	Buy	$260,300	$468,500

The cost of nitrogen and phosphorus credits currently range from $5-9 per pound. Therefore, the Authority will incur an annual net credit expenditure of $240,000 to $435,000.

3.10 Conclusions

The process option that best achieves nutrient removal at the Clearfield Plant is the MLE/VIP Activated Sludge NRT Process. From a cost effectiveness standpoint, the MLE process is well suited for integration with the existing process and offers functional operational advantages. Three possible options will now be analyzed from a cost effectiveness standpoint. Apart from the three NRT approaches, the fourth option is to buy nutrient credit annually through the PADEP Nutrient Trading Program during the 60 day truing period.

Option 1 and Option 2 should be used in conjunction with the step-feed process at peak flows, in order to diminish solids washouts from the reactors. Option 3 is considered an interim measure until actual peak flows are known after 2012.

Finally, it needs to be emphasized that the proposed reactor modifications and system improvements afford the ability to operate efficiently, but also allows flexibility for the reactors to operate under alternative activated sludge NRT processes such as the Johannesburg, anaerobic-anoxic-aerobic (A2O), and the University of Cape Town (UCT) processes.

Section 4: Cost Analysis

4.1 Cost-Effectiveness Evaluation

In the previous chapter, we performed an alternatives evaluation of various options, with possible application at the CMA WWTF. A screening of these alternatives was done on the basis of engineering judgment. We examined the NRT processes that are most compatible from an operational and capital construction standpoint with the current process. These alternatives were screened with the most obvious factor being cost. Other factors included operation and maintenance considerations and performance history with plants of similar size and treatment process. A summary of project costs for Options 1-4 is as follows:

Table 4-1: Project Cost Estimate for Option 1: New Treatment Plant

	Qty	Unit Cost	Total Cost		
Construction Cost					
1. Headworks (Grit/Screenings Removal)	1	$3,500,000	$3,500,000		
2. BNR Reactor Tanks	2	3,500,000	7,000,000		
3. New Clarifiers	2	2,250,000	4,500,000		
4. UV Disinfection System	1	1,000,000	1,000,000		
5. Chemical Feed Systems	LS	500,000	500,000		
6. Aerobic Digesters/Reuse Centrifuge	LS	2,500,000	2,500,000		
7. Electrical/Instrumentation/SCADA	1	2,000,000	2,000,000		
8. Control/Mechanical Buildings	1	$3,000,000	$3,000,000		
Total Construction Cost				*$24,000,000*	
Other Costs					
1. Engineering/Design/Const. Admin.			$2,000,000		
2. Legal/Administrative			150,000		
3. Contingency (5% of Construction)			1,200,000		
4. Land/Rights-of-Way			450,000		
5. Financing Cost			$200,000		
Total Other Costs				*$4,000,000*	
Total Project Cost Estimate, Option 1					***$28,000,000***

Table 4-2: Project Cost Estimate for Option 2: New Reactor Tanks with Existing Plant Upgrade

	Qty	Unit Cost	Total Cost		
Construction Cost					
1. Headworks (Grit/Screenings Removal)	1	$1,500,000	$1,500,000		
2. New BNR Reactor Tanks	2	4,000,000	8,000,000		
3. Reactor Clarifier Conversion	2	1,000,000	2,000,000		
4. UV Disinfection System	1	1,000,000	1,000,000		
5. Chemical Feed Systems	LS	500,000	500,000		
6. Mechanical Piping/Equipment	LS	1,500,000	1,500,000		
7. Electrical/Instrumentation/SCADA	1	1,750,000	1,750,000		
8. Renovate Control/Mechanical Buildings	1	$1,750,000	$1,750,000		
Total Construction Cost				*$18,000,000*	
Other Costs					
1. Engineering/Design/Const. Admin.			$1,600,000		
2. Legal/Administrative			100,000		
3. Contingency (6.5% of Construction)			1,150,000		
4. Land/Rights-of-way			0		
5. Financing Cost			$150,000		
Total Other Costs				*$3,000,000*	
Total Project Cost Estimate, Option 2					***$21,000,000***

Table 4-3: Project Cost Estimate for Option 3: Upgrade Existing Plant/Process

	Qty	Unit Cost	Total Cost		
Construction Cost					
1. Headworks (Grit/Screenings Removal)	LS	$300,000	$300,000		
2. New Anoxic Tank	1	750,000	750,000		
3. Reactor/Clarifier Upgrades	2	825,000	1,650,000		
4. Chemical Feed Systems	LS	300,000	300,000		
5. Solids Digesters/Dewatering	LS	0	0		
6. Electrical/Instrumentation/SCADA	1	$300,000	$300,000		
Total Construction Cost				*$3,300,000*	
Other Costs					
1. Engineering/Design/Const. Admin.			$370,000		
2. Legal/Administrative			50,000		
3. Contingency (10% of Construction)			330,000		
4. Land/Rights-of-way			0		
5. Financing Cost			$50,000		
Total Other Costs				*$800,000*	
Total Project Cost Estimate, Option 3					***$4,100,000***

Table 4-4: Project Cost for Option 4: Buy Nutrient Credits Only

	Influent (lbs/yr)	Effluent (lbs/yr)	NPDES Limit (lbs/yr)	Exceedence (lbs/yr)	Credits	Credits @ $5/lb	Credits @ $9/lb
TP	19,231	7,336	10,959	-3,623	Sell	$18,115	$32,600
TN	186,445	134,244	82,191	52,053	Buy	$260,300	$468,500

4.2 Project Financing

Several alternatives exist for financing the proposed improvements. Conventional sewer revenue bonds have been employed several times by CMA to finance capital improvements. Current municipal bonds have a yield of 5% for a term of 20-years.

In addition, the Pennsylvania Infrastructure Investment Authority has financed five (5) CMA projects totaling $25 million in low interest loans (1.00%-1.24% for 20-30 years). Recently, PennVEST financing has been difficult to obtain because of a limited funding pool for available projects. BNR projects are planned for dozens of large Pennsylvania municipal authorities in the Chesapeake Bay watershed. The common deadlines for these projects are 2010 and 2011. The following table is a summary of regional BNR projects planned by several municipalities.

Table 4-5: Tributary Municipalities BNR Costs

Municipality	BNR Cost	Capacity (MGD)	Cost/Gallon
Tyrone Borough	$9.1 Million	9 MGD	$1.01/gal.
Huntingdon Borough	$17.5 Million	4 MGD	$4.38/gal.
Scranton City	$16.6 Million	20 MGD	$0.83/gal.
Lewistown Borough	$16 Million	2.8 MGD	$5.71/gal.
Hazelton City	$15.4 Million	8.9 MGD	$1.73/gal.
Williamsport City	$84 Million	16 MGD	$5.25/gal.
Lock Haven City	$22 Million	3.75 MGD	$5.87/gal.
Altoona City	$19 Million	10.85 MGD	$1.75/gal.

The Pennsylvania Municipalities Authorities Association (PMAA) recently compiled BNR compliance costs in January 2008. Forty three (43) sewer authorities were contacted. The survey revealed a total of $408 million in planned BNR expenditures for a total treatment capacity of 185 MGD. The gross unit cost for BNR compliance is $2.20/gallon. The minimum unit cost (Option 3) for the CMA BNR upgrade is $0.91/gallon which compares favorably with the above average of $2.20/gallon, while the maximum cost (Option 1) is $6.22/gallon which is considerable higher than the average. The intermediate cost (Option 2) is $4.67/gallon. It should be noted that the higher unit cost is skewed because of the need to address non-BNR factors such as facility age and handling peak flow.

Not only will construction costs escalate, but also the competition for PennVEST financing. Continued PennVEST financing of future Authority projects is debatable. Unless additional funding streams are enacted by the PA state legislature, the Authority should not rely on PennVEST funding for a BNR project.

For purposes of this evaluation, we have assumed conventional municipal bond financing for the CMA BNR project. Sewer revenue bonds are proposed at a rate of 5% for a 20-year bond. Obviously, the municipal bond market will determine the final discount rate, as will the insurability of the issue and financial rating of the Authority's credit worthiness. The annual debt service cost for the Option 1 project is $2,250,000; $1,687,500 for Option 2; and $327,500 for Option 3.

4.3 Operating Costs

In terms of operating cost, we believe power chemical and manpower costs will increase, though to what extent is uncertain. We have tabulated operating costs for power consumption, by motor size, run times and efficiency in accordance with the following tabulation.

Table 4-6: Tabulation of Power BNR Consumption (Options 1 and 2)

	Units	Yearly Cost for ADF, $/Yr	Yearly Cost for MMF, $/Yr	Yearly Cost for MWF, $/Yr	Yearly Cost for MDF, $/Yr	Total Cost, $/Yr
Headworks						
Fine Screen Works	2	65	25	15	10	115
Vortex Grit Pumps	2	585	80	35	20	720
Vortex Grit Paddles	2	235	40	15	10	300
Grit Classifier	2	50	15	10	5	80
Conveyor	1	30	15	10	5	60
Reactors						
Submersible Mixers	4	4,000	500	75	30	4,605
Air Diffuser Blowers	2	60,000	4,500	1,310	190	66,000
Internal Recycle Pumps	2	7,000	700	150	20	7,870
Nitrate Recycle Pumps	4	11,250	1,200	250	30	12,730
Clarifier						
RAS Pumps	2	2,800	300	80	15	3,195
Macerator	1	60	8	11	2	81
Scum Pumps	1	300	40	20	4	364
Clarifier Mechanism/ Equipment	2	470	43	10	2	525
					Total Increased Power Cost	**96,645**
					USE	**100,000**

The electrical operation cost estimation is performed on following assumptions:

1. Efficiency of motors is assumed as 75% wherever the data is not available.
2. MMF days are assumed as 30; MWF days are 7; MDF is 1 day and hence ADF days are 327.
3. Average electrical cost is assumed as 0.06 $/KW-H.
4. The units noted above represent redundant operation. For power consumption purposes, therefore, only half the total units are included in the power consumption calculation.

Abbreviations:

ADF: Average Daily Flow
MMF: Maximum Monthly Flow
MWF: Maximum Weekly Flow
MDF: Maximum Daily Flow

The following additional operating costs are programmed for the CMA NRT process (Option Nos. 1 and 2):

a.	Chemicals	-	$100,000
b.	Power Consumption	-	$100,000
	Additional Annual Operating Costs	-	$200,000

We estimate the operating costs for Option 3 will be about $130,000. The current operation and maintenance (O&M) budget of the Wastewater Division is $780,000. With the additional BNR-related O&M costs ($200,000) the annual operating expenses will escalate to $1,000,000 or a 25% increase for Option's No. 1 and No. 2. For Option No. 3, the annual operating expenses will rise to $900,000 or a 17% increase.

4.4 Existing Debt Service Costs

The Clearfield Municipal Authority has the following indebtedness in the Wastewater Division.

Table 4-7: Current Indebtedness (As of January 1, 2007)

Instrument	Original Amount	Outstanding Principal	Est. Final Payment Date	Annual Debt Service
PennVEST Loan (Phase I Plant Improvements)	$2,120,000	$1,600,000 (Est.)	2024	$108,420

The existing debt of the Authority is considered low when compared to the asset value of the physical plant.

4.5 Projected Operating Costs and Debt Service

The following table sets forth the projected operating costs of each Option.

Table 4-8: Projected Operating Costs and Debt Service

Option	Existing O&M	Existing Debt	Total (Existing)	Projected O&M	Projected Debt	Project Credits	Total (Projected)	Increase
1	$780,000	$108,400	$888,400	$980,000	$2,250,000	$0	$3,230,000	365%
2	$780,000	$108,400	$888,400	$980,000	$1,687,500	$0	$2,667,500	300%
3	$780,000	$108,400	$888,400	$910,000	$327,500	$0	$1,237,500	140%
4	$780,000	$108,400	$888,400	$0	$0	$350,000	$1,238,400	140%

4.6 Sewer Rate Analysis

CMA maintains a 4-tier, declining block rate structure. The current sewer rate is sufficient all operation and maintenance costs and debt service currently incurred by the Authority. The following sewer rate schedule is currently in effect:

Table 4-9: Sewer Rate Schedule - Meter Rates
(Effective February 1, 2004)

MINIMUM CHARGES		
Meter Size	**Quarterly Rate**	**Daily Rate**
5/8"	$13.72	$0.152444
3/4"	20.58	0.228667
1"	34.30	0.381111
1-1/2"	68.60	0.762222
2"	109.76	1.219556
3"	219.52	2.439111
4"	$258.72	$2.874667

First 1,000 gallons	……	$2.27
2,000 - 15,000 gallons	……	$2.25 Per Thousand
16,000 - 50,000 gallons	……	$1.96 Per Thousand
51,000 & Over	……	$1.66 Per Thousand

Surcharge: $3.50 per thousand gallons surcharge for Lawrence Township sewage customers; $8.00 per thousand gallons surcharge for Clearfield Borough sewage customers.

We analyzed the effects of the BNR project on current sewer rates for the projected maximum project (Option 1), intermediate project (Option 2) and minimum project (Option 3) for a typical residential customer using 15,000 gallons per quarter as follows for each municipality.

Table 4-10: Sewer Rate Analysis - Proposed Option 1 Project
(Per Quarter)

Meter Size	Minimum Charge	Consumption Charge	Boro. Surcharge	Option 1 Project Charge	Total Boro. Charge	Twp. Surcharge	Option 1 Project Charge	Total Twp. Charge
5/8"	$13.75	$33.77	$120.00	$125.00	$292.00	$52.50	$125.00	$225.00

Table 4-11: Sewer Rate Analysis - Proposed Option 2 Project
(Per Quarter)

Meter Size	Minimum Charge	Consumption Charge	Boro. Surcharge	Option 2 Project Charge	Total Boro. Charge	Twp. Surcharge	Option 2 Project Charge	Total Twp. Charge
5/8"	$13.75	$33.77	$120.00	$90.00	$258.00	$52.50	$90.00	$190.00

Table 4-12: Sewer Rate Analysis - Proposed Option 3 Project (Per Quarter)

Meter Size	Current Minimum Charge	Current Consumption Charge	Boro. Surcharge	Option 3 Project Charge	Total Boro. Charge	Twp. Surcharge	Option 3 Project Charge	Total Twp. Charge
5/8"	$13.75	$33.77	$120.00	$25.00	$193.00	$52.50	$25.00	$125.00

It should be noted that the Township surcharge does NOT include any debt service surcharges for its Phase II project. We, therefore, expect the Township charge to rise accordingly in the near future. In addition, we have provided a comparison of regional sewer charges in the following table.

Table 4-13: Comparison of Regional Sewer Rates

Logan Township, Blair County	$39/month (flat rate)
Williamsport Sanitary Authority	$18.67/month (metered)
Osceola Mills (ORD) Sewer Authority	$46/month (flat rate)
Muddy Run Regional Authority	$57/month (flat rate)
Portage Area Sewer Authority	$36.50/month (metered-projected)
Saxton Borough Municipal Authority	$42/month (flat rate)
Johnstown Regional Sewage Authority	$19.31/month (metered)
Altoona City Authority	$29.00/month (metered)

Clearfield Municipal Authority ($28 Million Project, Option 1)	$97.00/month (Boro.) $75.00/month (Twp.)
Clearfield Municipal Authority ($21 Million Project, Option 2)	$86.00/month (Boro.) $63.30/month (Twp.)
Clearfield Municipal Authority ($4.08 Million Project, Option 3)	$64.00/month (Boro.) $41.60/month (Twp.)

It is apparent that if Option 1 and Option 2 projects are required, the projected sewer rates will greatly exceed any of the regional sewer rates.

Section 5: Project Schedule

The following project implementation schedule is required to meet the completion date stipulated in the Authority's NPDES permit for the CMA WWTF.

1.	Complete NRT Study	March 31, 2008
2.	Start Design	April 30, 2008
3.	Complete Design	November 30, 2008
4.	Submit PADEP Permits	December 31, 2008
5.	Receive Permits	May 1, 2009
6.	Receive Construction Bids	June 30, 2009
7.	Start Construction	August 1, 2009
8.	Complete Construction	September 30, 2010
9.	Begin Compliance	September 30, 2011

The schedule for compliance must also consider the following factors:

1. Extremely aggressive schedule for compliance.
2. Requires start of design immediately.
3. Concern exists with DEP's ability to review permit application in a timely manner.
4. PennVEST funding may well be inadequate and sewer revenue bonds or local financing may be required.
5. Short construction schedule (12 months) may result in escalated costs.
6. If the Authority fails to comply by the above deadline, nutrient credit purchasing may be the only recourse.

Section 6: Operational Considerations

The BNR process will involve significant operational changes to the current process. The existing plant was designed and operated as a conventional activated sludge process. With the addition of nutrient removal, the plant should now be considered an advanced waste treatment plant with all the operational complexities inherent with BNR.

The MLE process (involving step feed pumping, nutrient and RAS return pumping, submersible mixing, oxic and anoxic control) combines a sophisticated manipulation of plug flow reactor kinetics with chemical nitrogen conversion and phosphorous removal. The plant involves a high degree of process sophistication and operational control.

Treatment plant operators must understand nutrient removal technology and their variations including the VIP, MLE, Step Feed, A2O and Johannesburg processes. This understanding must begin with the microbiology of the organisms that nitrify, denitrify, and enhance biological phosphorus removal.

Operators will be responsible for setting operating parameters so the treatment plant complies with the annual allocations for Total Nitrogen and Total Phosphorus contained in the NPDES permit. The operators will control and optimize nutrient removal by determining the following parameters and adjusting operations as flows and temperatures change:

* Select which process is to be used including the VIP, MLE, A2O and Johannesburg processes. Step Feed is anticipated to be used at any time of the year when excessive influent flows threaten to overwhelm the secondary clarifiers, causing solids washouts. The operator will select among the other processes as needed to optimize nitrification, denitrification, or biological phosphorus removal. Which process is optimal will depend on actual flows, loads, and wastewater temperatures.

* Mean cell residence time: increase and decrease waste activated sludge flows to control the MCRT.

* Nutrient recycle flows: adjust return sludge, nitrate and mixed liquor recycle pumping rates to minimize effluent nutrient concentrations.

* Dissolved Oxygen Concentration: Set operating parameters for the air supply blowers and air diffuser grids so nitrogen is full nitrified in the aerobic zone, without recycling excess DO to the anoxic zone.

* Chemically enhanced clarification: Determine when chemicals must be fed to enhance clarification during peak flows and/or loads and during process upsets. Establish chemicals to be fed and feed concentrations.

A process operator should have knowledge of the BioWin computer model as an operating tool. This operator should optimize the process and predict operating results by inputting actual influent flows, temperatures, and pollutant loads. Model results should be compared against actual effluent quality to refine the process on a continuous basis.

Operators must understand the function of all equipment and components used in the NRT process and be familiar with their operation and maintenance needs. Operators will utilize the treatment plant's computerized process control system by reading and interpreting data from multiple field instruments, probes, and flow meters and using the control system to adjust the operation of NRT process equipment including aeration blowers, recycle and waste sludge pumping, and chemical feed systems.

We recommend that all operators undertake the necessary training and education required to fully understand the BNR process and perform the process control functions stated above.

Section 7: Recommendations

Based on our evaluation of the existing Wastewater Treatment Facility and computer modeling of various NRT processes, we offer the following recommendations for compliance with the PADEP permit limits for nitrogen and phosphorus:

1. The Modified Ludzack-Ettinger (MLE) Process (Plug Flow, Single Stage, Activated Sludge) should be implemented as the Nutrient Removal Technology at the WWWTF. This process offers future adaptation to other NRT processes including the VIP, A2O, UCT and Johannesburg systems.

2. Option 3 (Retrofit Existing Plant/Process) is the most cost effective MLE process option for adaptation to the existing treatment plant. Moreover, this option allows the CMA to comply with the BNR limits until the ongoing sewer separation project is complete. This option may not bring the TN and TP yearly discharge under the NPDES limit, however the yearly nutrient discharge will be in a controlled range and hence will limit excessive spending for nutrient credits.

3. This option includes installing a 320,000 gallons tank (which will be used as the anoxic reactor zone for the MLE process), with submersible mixers. The option will also include retrofitting the existing distribution structure for step-feed purposes, installation of baffle walls in existing aeration tanks, replacing coarse bubble diffusers with fine bubble diffusers, higher pumping and piping capacity and arrangement for higher chemical feed.

4. Option 3 will include provisions for a step-feed system during peak flow events. No recommendations are made at this time for the sludge digestion, conditioning, thickening, dewatering, storage or disposal system. This system will be entirely integrated into the NRT system.

5. The total project cost of the recommended improvements is $4.1 million. We recommend that the Authority issue Sewer Revenue Bonds, pursue Pennvest financing or locally financed through a bank note. Unless the legislature enacts supplemental funding, Pennvest financing may not be considered a viable alternative.

6. Failure of the Clearfield Borough and Lawrence Township sewer replacement projects to eliminate CSO discharges and peak system flow will necessitate a costly treatment compliance project for the Authority. This compliance cost, reflected in Options 1 and 2, will be at least $21

to $28 million, and is entirely dependent on the final peak flow. According to the Consent Order and Agreement and CMA's Long Term Control Plan, the Authority will be forced to implement whatever treatment compliance project is necessary to eliminate all CSO's and treat all flow at the WWTF.

7. No recommendations or costs are offered for improving the upstream conveyance system including pump stations and interceptor sewers. The final peak flow from the Township and Borough collection systems will determine the need, if any, for upgrading these systems.